INDEX OF DRAWING–TRAFFIC

DRAWING NO.	TITLE
TS–1	ILLUMINATED STREET NAME SIGN
TS–2	REGULATORY WARNING SIGN
TS–3	SCHOOL FLASHING BEACON
TS–4	POWER FEED FOR TRAFFIC SIGNALS
TS–5	PULLBOX (PLASTIC/PREFAB)
TS–6	PULLBOX (SPECIAL)
TS–7	PEDESTRIAN POLE
TS–8	POWER SOURCE SCHEMATIC
TS–9	SIGNAL HEAD MOUNTING
TS–10	CONTROLLER CABINET
TS–11	CONDUIT DETAILS
TS–12	FLASHING BEACON
TS–13A	MASTARM POLES (MAX 55')
TS–13B	MASTARM POLES (MAX 55')
TS–13C	MASTARM POLES (MAX 55')
TS–13D	MASTARM POLES (MAX 55')
TS–14A	MASTARM POLES (>55' & DOUBLES)
TS–14B	MASTARM POLES (>55' & DOUBLES)
TS–14C	MASTARM POLES (>55' & DOUBLES)
TS–14D	MASTARM POLES (>55' & DOUBLES)
TS–14E	MASTARM POLES (>55' & DOUBLES)

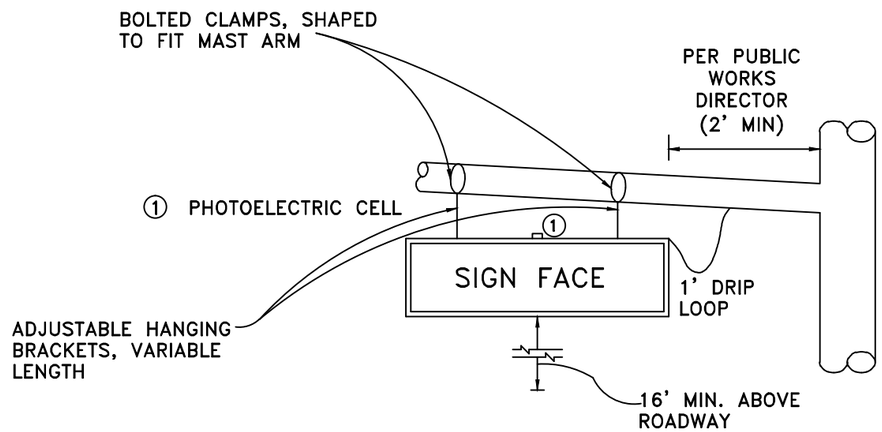

STANDARD MOUNT

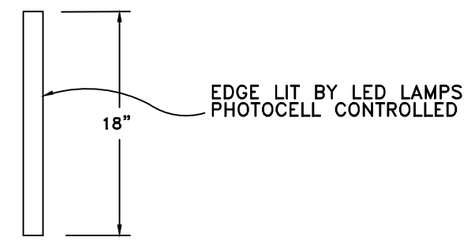

SIDE VIEW

NOTES

1. FOR DETAILS ON SIGN REFER TO DETAIL NO. 922-01, TYPICAL STREET SIGNS.
2. FINAL SIGN LAYOUT AND LETTERING DETAILS PER PUBLIC WORKS DIRECTOR.
3. SIGN TO BE DOUBLE SIDED WITH WHITE PRINT ON GREEN BACKGROUND FOR STREET NAME AND LOGO.

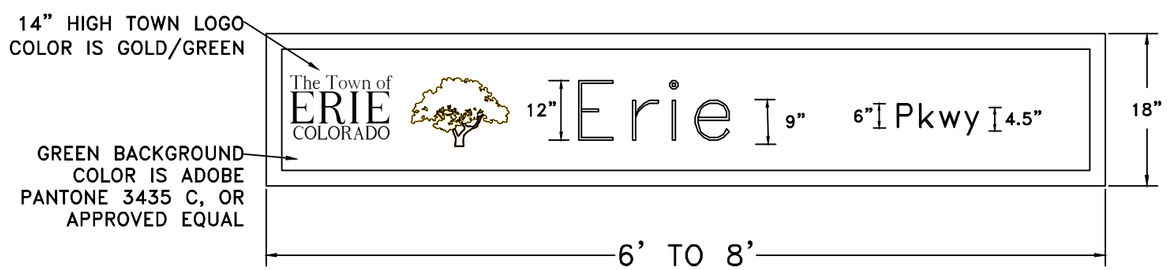

LIGHTED SIGN TYPICAL LAYOUT

GENERAL NOTES

1. STREET NAME SIGN TO BE FREE-SWINGING OR LIMITED-SWINGING. SIGN FIXTURE AND PANELS SHALL WITHSTAND 90 MPH WIND LOADING, WITH STRUCTURAL REQUIREMENTS MEETING AASHTO "STANDARD SPECIFICATIONS FOR STRUCTURAL SUPPORTS FOR HIGHWAY SIGNS, LUMINAIRES AND TRAFFIC SIGNALS," LATEST EDITION.
2. HOUSING TO BE CONSTRUCTED OF ALUMINUM.
3. NEOPRENE GASKETS SHALL BE INSTALLED BETWEEN THE SIGN PANEL FRAME AND FIXTURE HOUSING TO PREVENT WATER ENTRANCE. SCREENED WEEP HOLES SHALL BE PROVIDED ON HOUSING BOTTOM FOR DRAINAGE.

The Town of ERIE COLORADO

DRAWING TITLE: ILLUMINATED STREET NAME SIGN

DRAWING NUMBER: TS-1

DRAWN BY: W.L. APPROVED BY: G. BEHLEN DATE: 1/2015

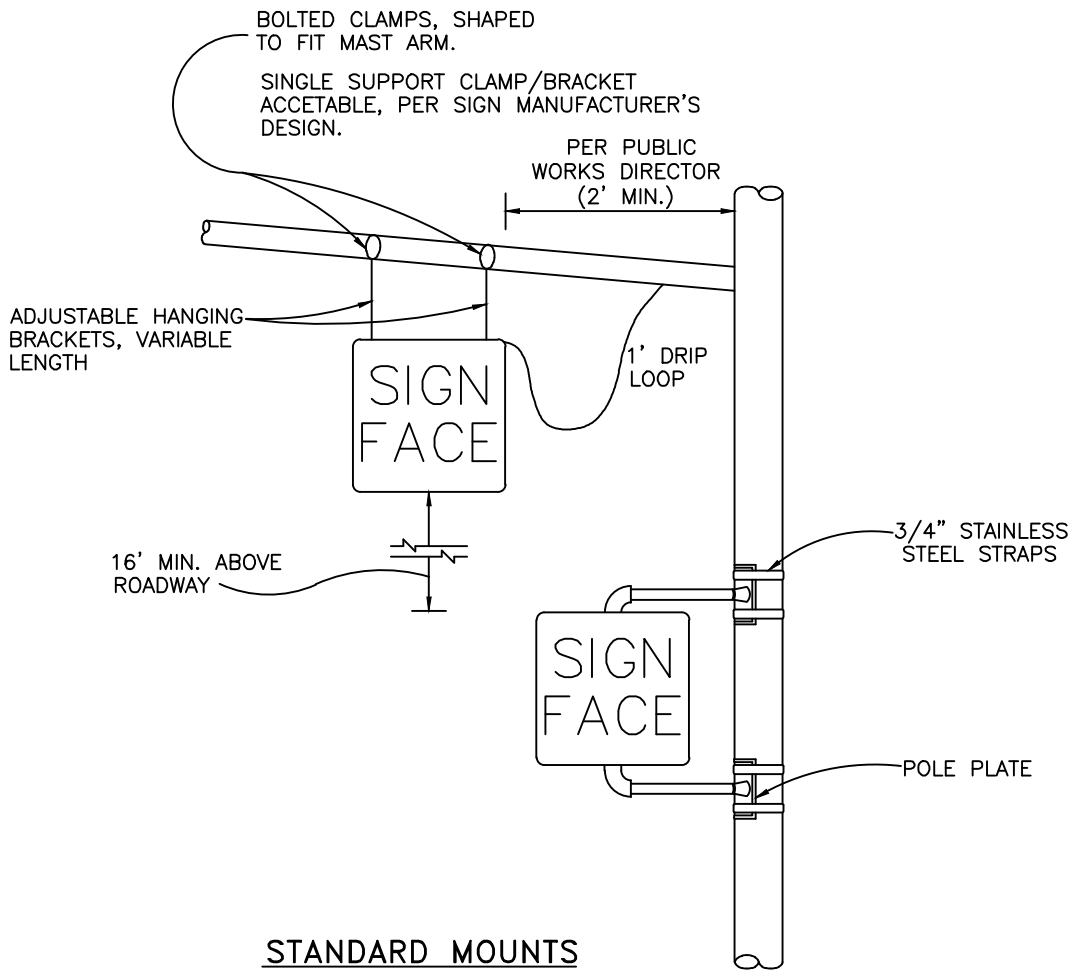

STANDARD MOUNTS

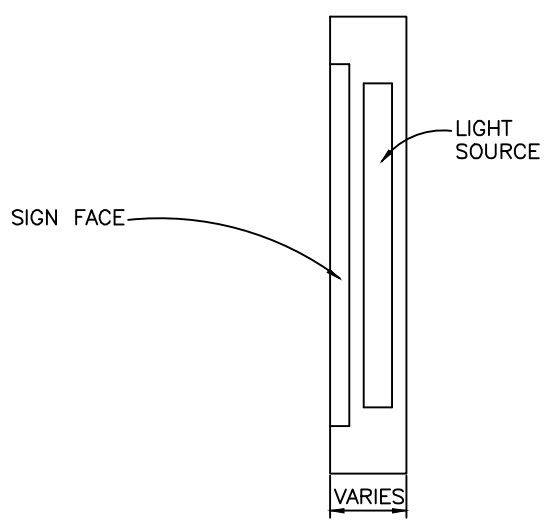

SIDE VIEW

NOTES

NOTES

1. SIGN MAY BE SINGLE–SIDED OR DOUBLE SIDED PER ENGINEER'S DIRECTION.
2. SIGN COLOR, LEGEND AND SIZE PER PUBLIC WORKS DIRECTOR.

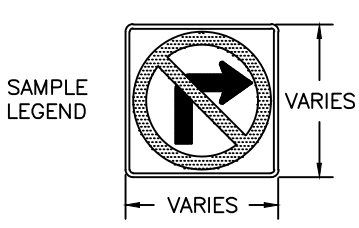

TYPICAL SIGN LAYOUT

GENERAL NOTES

1. SIGN FIXTURE AND PANELS SHALL WITHSTAND 90 MPH WIND LOADING, WITH STRUCTURAL REQUIREMENTS MEETING AASHTO "STANDARD SPECIFICATIONS FOR STRUCTURAL SUPPORTS FOR HIGHWAY SIGNS, LUMINAIRES AND TRAFFIC SIGNALS," LATEST EDITION.
2. HOUSING SHALL BE CONSTRUCTED OF ALUMINUM UNLESS OTHERWISE DIRECTED BY ENGINEER.
3. NEOPRENE GASKETS SHALL BE INSTALLED BETWEEN THE SIGN PANEL AND FIXTURE HOUSING TO PREVENT WATER ENTRANCE. SCREENED WEEP HOLES SHALL BE PROVIDED ON HOUSING BOTTOM FOR DRAINAGE.

The Town of ERIE COLORADO

DRAWING TITLE: REGULATORY WARNING SIGN

DRAWING NUMBER: TS–2

DRAWN BY: W.L. APPROVED BY: G. BEHLEN DATE: 1/2015

OPTIONAL SOLAR PANEL

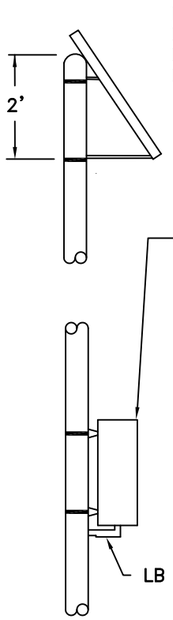

DETAIL "A"

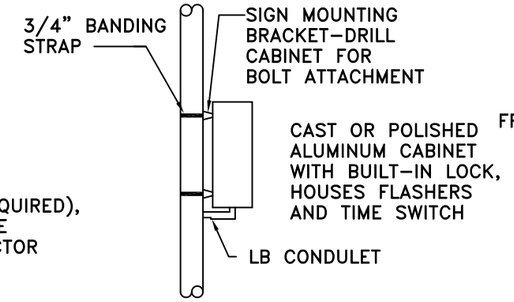

DETAIL "B"

OPPOSITE DIRECTION 8" FLASHER

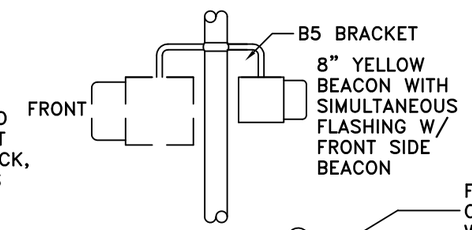

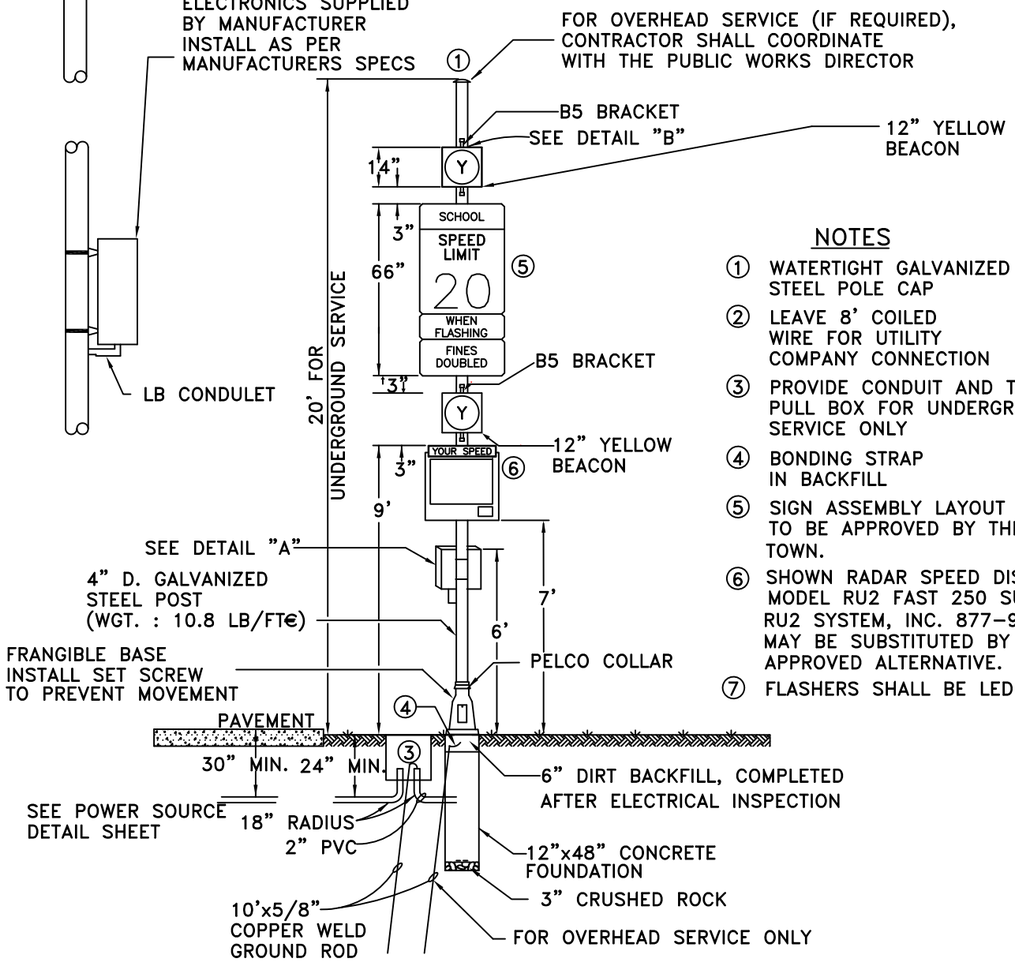

NOTES

① WATERTIGHT GALVANIZED STEEL POLE CAP

② LEAVE 8' COILED WIRE FOR UTILITY COMPANY CONNECTION

③ PROVIDE CONDUIT AND TYPE III PULL BOX FOR UNDERGROUND SERVICE ONLY

④ BONDING STRAP IN BACKFILL

⑤ SIGN ASSEMBLY LAYOUT TO BE APPROVED BY THE TOWN.

⑥ SHOWN RADAR SPEED DISPLAY SIGN IS MODEL RU2 FAST 250 SUPPLIED BY RU2 SYSTEM, INC. 877–9829–5237. MAY BE SUBSTITUTED BY A TOWN APPROVED ALTERNATIVE.

⑦ FLASHERS SHALL BE LED

FLASHING BEACONS

ALL FLASHING BEACONS SHALL BE POLYCARBONATE WITH TUNNEL VISORS AND BLACK HOUSINGS

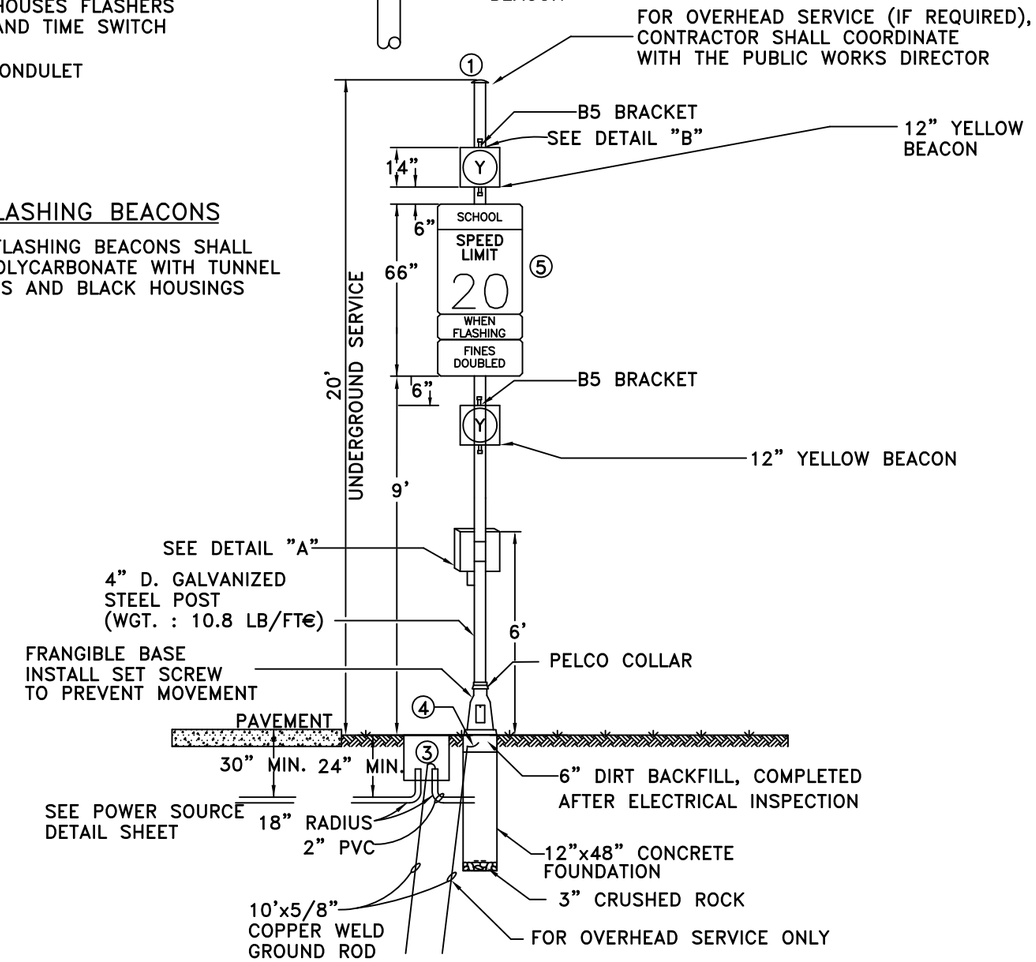

SCHOOL FLASHING BEACON ASSEMBLY SIDE OF ROAD, TYPE 1

SCHOOL FLASHING BEACON ASSEMBLY SIDE OF ROAD, TYPE 2

The Town of ERIE COLORADO

DRAWING TITLE: SCHOOL FLASHING BEACON

DRAWING NUMBER: TS–3

DRAWN BY: C.GERATY APPROVED BY: G. BEHLEN DATE: 5/2016

NOTES

① PROVIDE TYPE III PULL BOX/GROUND ROD AND 2" PVC CONDUIT ONLY IF D EXCEEDS 10'

② PROVIDE 2" GRC CONDUIT WITHOUT PULL BOX/GROUND ROD IF D IS LESS THAN 10'

③ MINIMUM CONDUIT DEPTHS:
UNDERGROUND 24"
UNDER PAVEMENT 30"

④ WHERE REQUIRED BY UTILITY COMPANY, CONTRACTOR SHALL BE RESPONSIBLE FOR OBTAINING PERMIT AND INSPECTION FROM THE STATE ELECTRICAL BOARD.

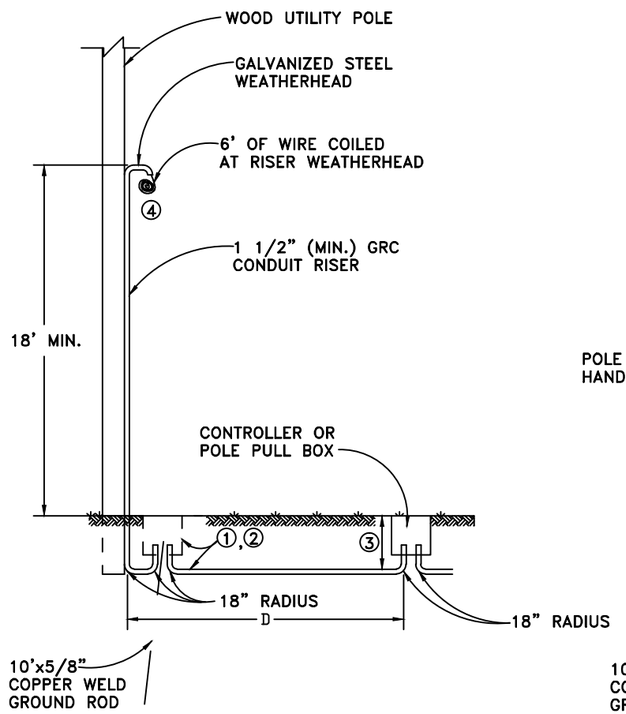

WITH WOOD UTILITY POLE

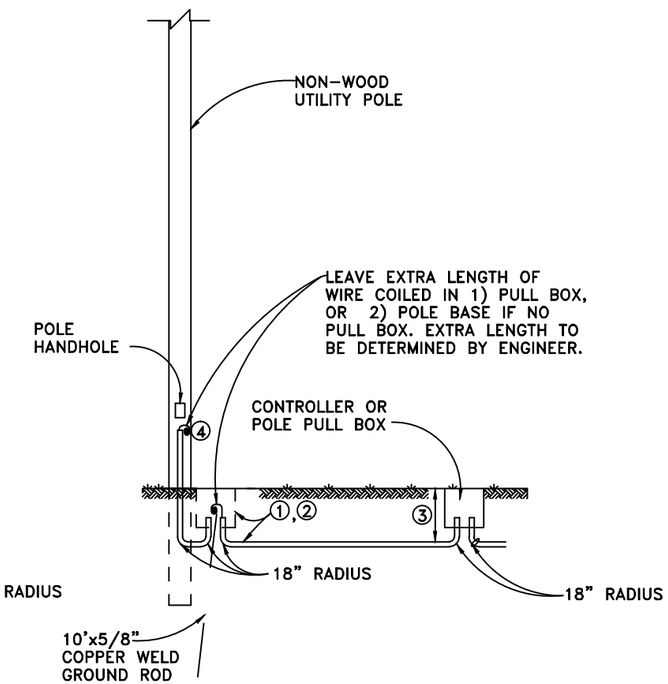

WITH NON-WOOD UTILITY POLE

TYPICAL UNDERGROUND POWER FEED FOR TRAFFIC SIGNALS AND SCHOOL FLASHING BEACON ASSEMBLIES

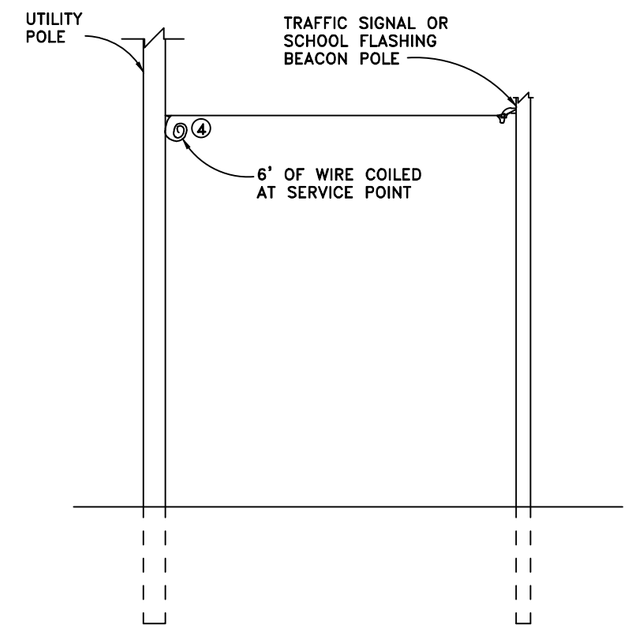

TYPICAL OVERHEAD POWER FEED FOR TRAFFIC SIGNAL AND SCHOOL FLASHING BEACON ASSEMBLIES

The Town of ERIE COLORADO

DRAWING TITLE: POWER FEED FOR TRAFFIC SIGNALS

DRAWING NUMBER: TS-4

DRAWN BY: W.L. APPROVED BY: G. BEHLEN DATE: 1/2015

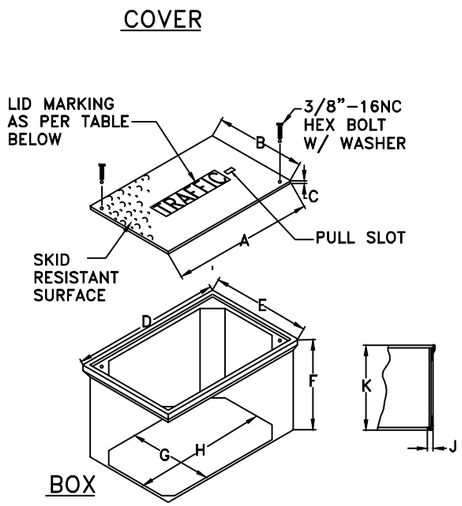

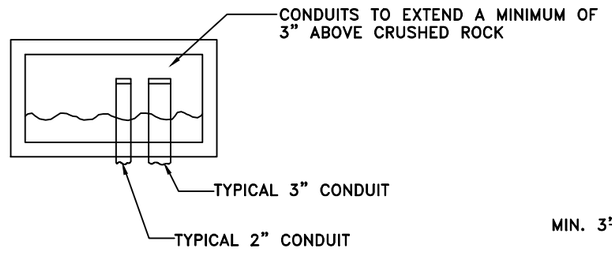

TYPICAL PULL BOX

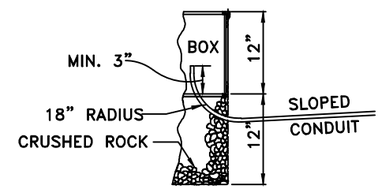

TWO BOXES & EXTENSION

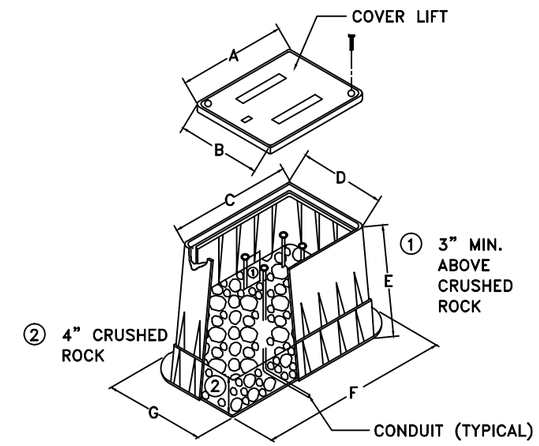

FIBERGLASS REINFORCED POLYMER CONCRETE DESIGNED FOR SERVICE LOAD (MINIMUM) OF 15,000 LBS. OVER A 10" SQUARE

PULLBOXES

PULL BOX USAGE	SIZE	PULL BOX LID MARKING
CABINET HOME RUN PULLBOX	24"x36"x18"	TRAFFIC
SIGNAL POLE PULL BOX	17"x30"x12"	TRAFFIC
DETECTOR PULL BOX (SIDE OF ROAD)	12"x12"x12"	TRAFFIC
DETECTOR WATER VALVE	WATER VALVE	TRAFFIC
COMMUNICATION VAULT (T/S CABINET)	30"x48"x18"	TRAFFIC COMM
COMMUNICATION VAULT (INTERMEDIATE LOCATIONS)	24"x36"x18"	TRAFFIC COMM
TELEPHONE DEMARCATION	13"x24"x12"	TRAFFIC COMM
ELECTRICAL DEMARCATION	13"x24"x12"	ELECTRIC

The Town of ERIE COLORADO

DRAWING TITLE: PULLBOX (PLASTIC/PREFAB)

DRAWING NUMBER: TS-5

DRAWN BY: W.L. APPROVED BY: G. BEHLEN DATE: 1/2015

PULL BOX (SPECIAL)

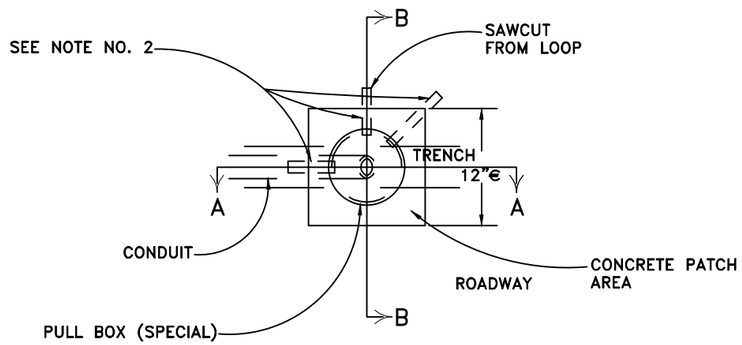

TOP VIEW

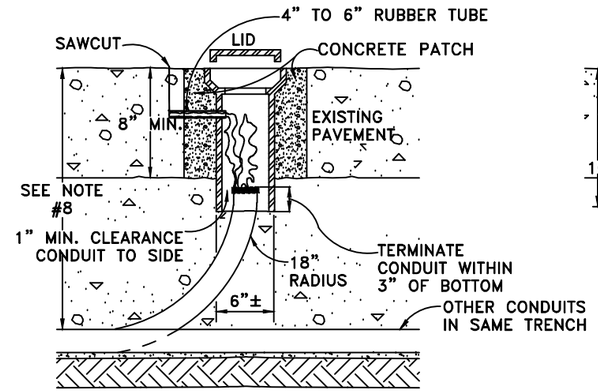

SECTION A–A

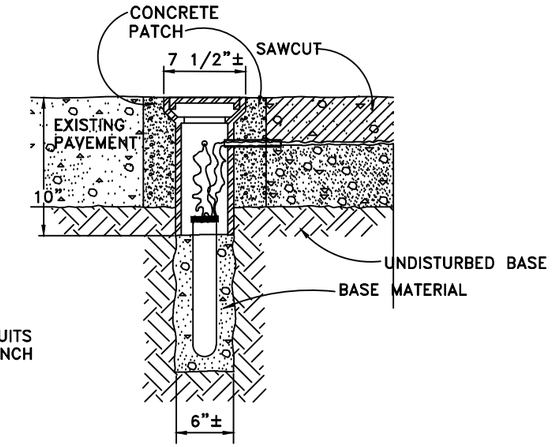

SECTION B–B

GENERAL NOTES

1. PULL BOX (SPECIAL) SHALL BE A WATER VALVE STEM TYPE PULL BOX MADE OF ALUMINUM WITH A CAST IRON LID. THE PULL BOX SHALL HAVE THE CAPABILITY OF ACCEPTING RISER RINGS FOR FUTURE OVERLAYS. THE LID SHALL HAVE THE WORD "TRAFFIC" PRINTED ON IT.
2. PULL BOXES SHALL HAVE 3/4" TO 1" DIAMETER HOLES DRILLED OR TORCHED 3" FROM TOP TO ACCEPT A 4" TO 6" RUBBER TUBE (3/4" GARDEN HOSE). THE NUMBER OF HOLES SHALL BE AS PER PLANS OR AS DIRECTED BY THE PUBLIC WORKS DIRECTOR.
3. CARE SHALL BE TAKEN DURING BACKFILL COMPACTION TO PREVENT COLLAPSE OF THE TUBES.
4. 2' MINIMUM SLACK OF BOTH FEED AND LOOP WIRES IS TO BE PROVIDED SO THAT ALL TESTING AND SPLICING CAN BE DONE OUTSIDE OF THE PULL BOX.
6. PULL BOX IS TO BE LOCATED IN AN AREA OF THE STREET NOT HEAVILY TRAVELED IF POSSIBLE AND CENTERED A MINIMUM OF 12" FROM THE CONCRETE GUTTER PAN.
7. ALL WORK LISTED ABOVE FOR INSTALLATION OF PULL BOXES SHALL NOT BE PAID FOR SEPARATELY, BUT SHALL BE INCLUDED IN THE PRICE OF THE CONDUIT.
8. CONDUIT UNDER ROADWAY SHALL BE LOCATED AT A DEPTH OF NOT LESS THAN 30 INCHES.

The Town of ERIE COLORADO

DRAWING TITLE: PULLBOX (SPECIAL)

DRAWING NUMBER: TS–6

DRAWN BY: W.L. APPROVED BY: G. BEHLEN DATE: 1/2015

TYPICAL PEDESTRIAN PUSH-BUTTON SIGNS

SIGN SHALL BE LABEL (STICK-ON) TYPE

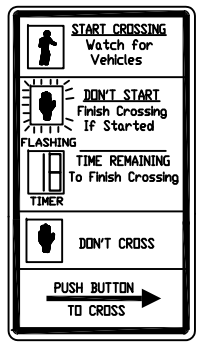

R10-3e
9"x15"
COUNTDOWN

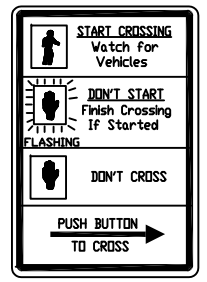

R10-3b
9"x12"
NON-COUNTDOWN

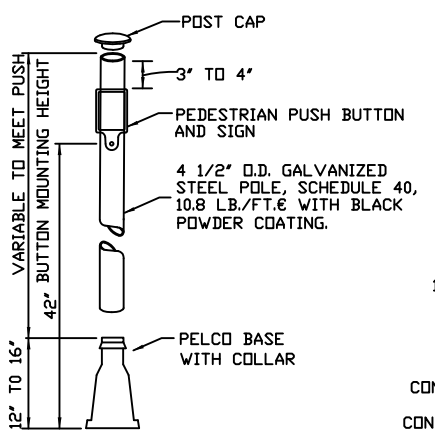

PEDESTRIAN PUSH BUTTON POLE

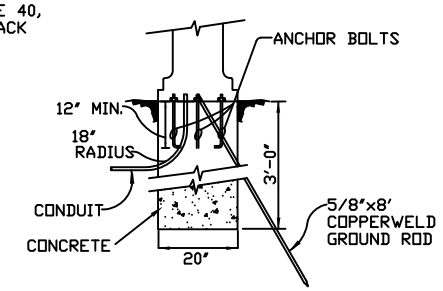

FOUNDATION DETAIL

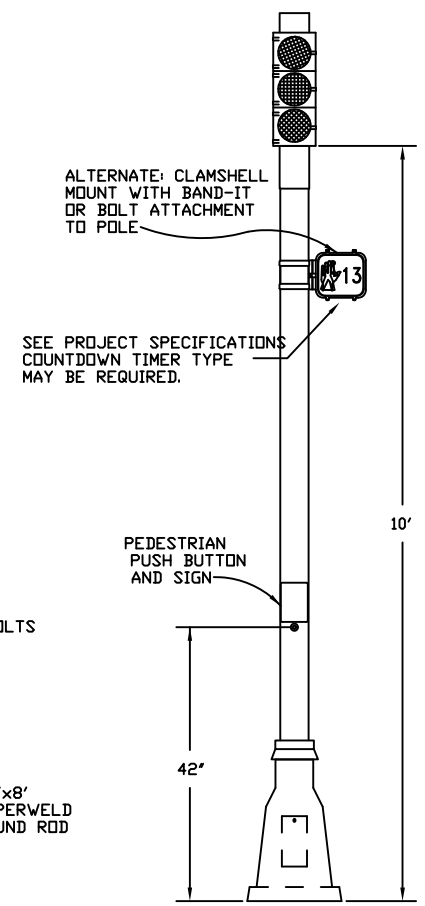

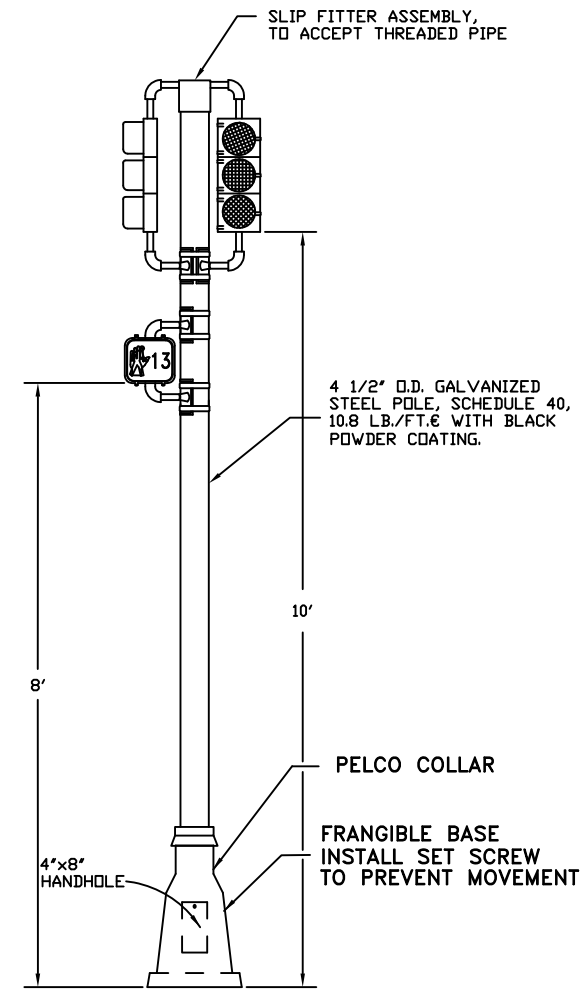

PEDESTAL POLE SHALL BE HOT DIPPED GALVANIZED PER ASTM A123, EQUIVALENT TO 2 OZ. PER SQUARE FOOT, INSIDE AND OUT

TYPICAL PEDESTAL POLE DETAIL

1/4" SPLIT PIN SHALL BE INSTALLED IN THE UPPER PORTION OF THE ALUMINUM BASE AND SHALL COMPLETELY PENETRATE BASE AND POLE TO SECURE POLE TO PREVENT MOVEMENT OR TWISTING. PELCO COLLAR TO BE INSTALLED.

FOOTING NOTES

1. ANCHOR BOLTS (FURNISHED WITH POLE) PER MANUFACTURER'S TEMPLATE.
2. CAISSON DESIGNS REQUIRE THAT THE CAISSON BE FOUNDED IN COMPACT SAND, CLAY OR SANDY CLAY. IF, BY VISUAL INSPECTION OF THE HOLE' OTHER MATERIAL IS PRESENT, THE CAISSON DESIGN SHALL BE MODIFIED AND APPROVED BY THE CONSTRUCTION MANAGER.
3. 5/8"x8' COPPERWELD GROUND ROD THROUGH FOUNDATION, INTO GROUND.
4. HAND HOLE SHALL BE PROVIDED.

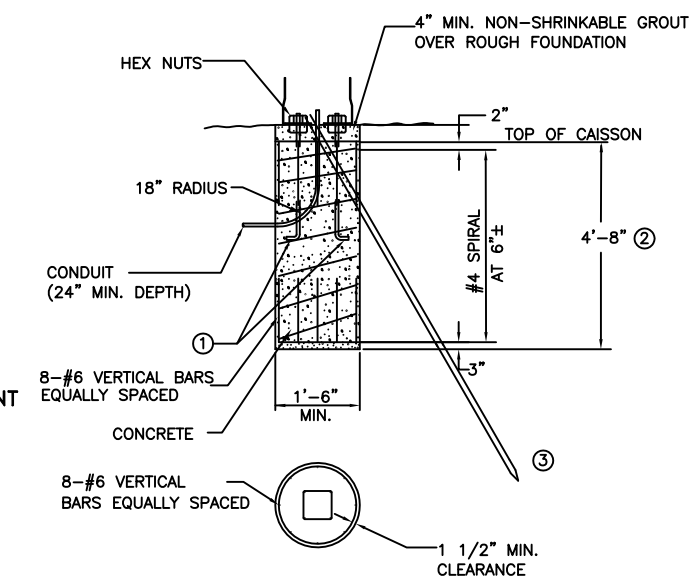

TYPICAL PEDESTAL POLE FOUNDATION

(CAST IN PLACE)

The Town of ERIE COLORADO

DRAWING TITLE: PEDESTRIAN POLE

DRAWING NUMBER: TS-7

DRAWN BY: W.L. APPROVED BY: G. BEHLEN DATE: 1/2016

UNDERGROUND POWER SOURCE SCHEMATIC FOR SIGNALS WITH LUMINAIRES

NOT TO SCALE

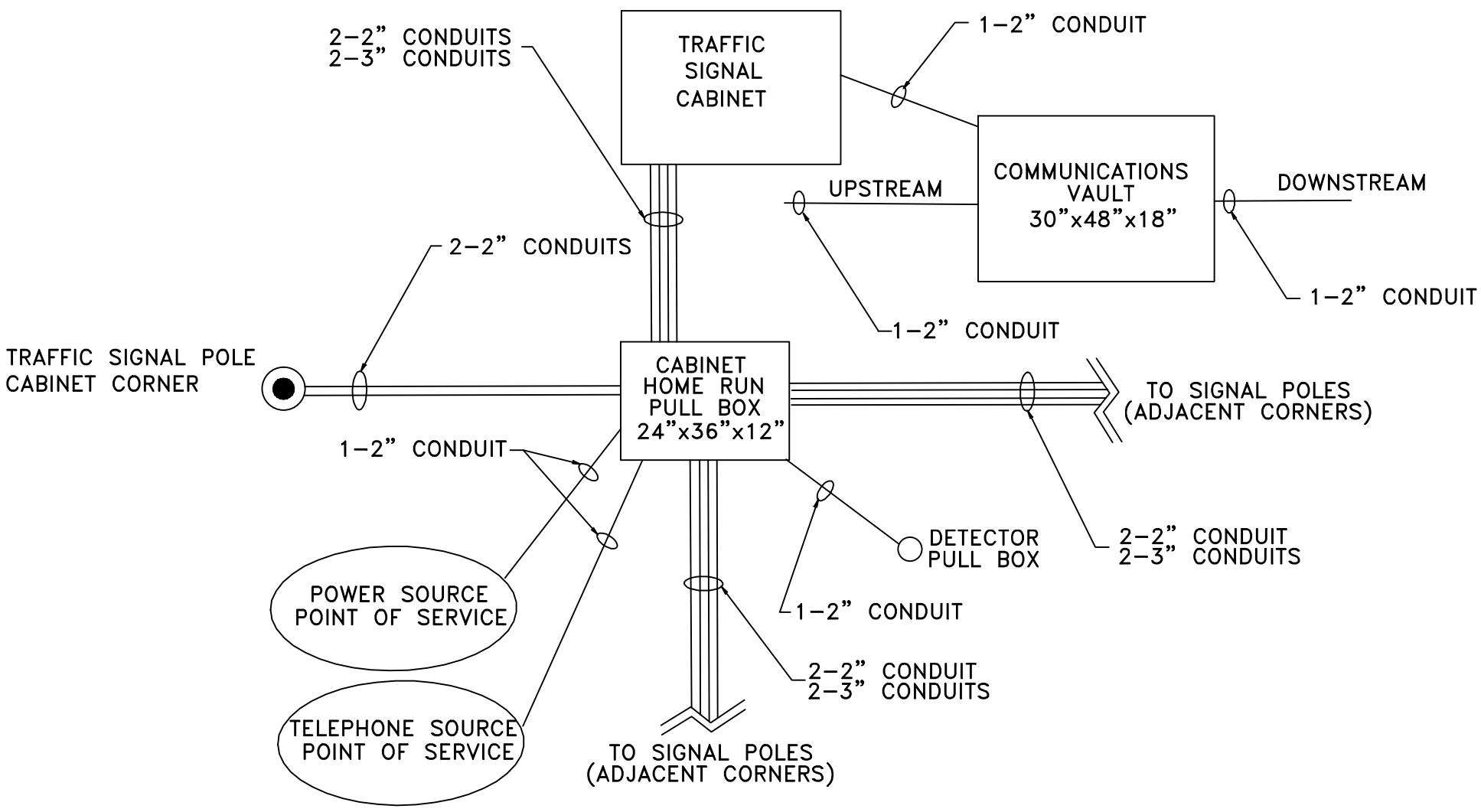

RECOMMENDED CONDUIT/CABLE RELATIONSHIPS

"CABINET HOME RUN PULL BOX" TO "TRAFFIC SIGNAL CABINET"
- 1 OF 2 – 2" CONDUITS: POWER FROM POINT–OF–SERVICE
- 2 OF 2 – 2" CONDUITS: LOW VOLTAGE & VIDEO
- 1 OF 2 – 3" CONDUITS: FIELD WIRING (120 VAC)
- 2 OF 2 – 3" CONDUITS: SPARE

"CABINET HOME RUN PULL BOX" TO "SIGNAL POLE PULLBOX"/
"SIGNAL POLE PULL BOX" TO "SIGNAL POLE PULL BOX" ON ADJACENT CORNERS
- 1 OF 2 – 2" CONDUIT: LUMINAIRE POWER
- 2 OF 2 – 2" CONDUITS: LOW VOLTAGE & VIDEO
- 1 OF 2 – 3" CONDUITS: FIELD WIRING (120 VAC)
- 2 OF 2 – 3" CONDUITS: SPARE

"SIGNAL POLE PULL BOX" TO "SIGNAL POLE"
- 1 OF 1 – 2" CONDUIT: LUMINAIRE POWER
- 2 OF 2 – 2" CONDUITS: FIELD WIRING

"CABINET HOME RUN PULL BOX" TO "POINTS OF SERVICE"
- 1 OF 2 – 2" CONDUITS: POWER FROM POINT OF SERVICE
- 2 OF 2 – 2" CONDUITS: TELEPHONE FROM POINT OF SERVICE

"COMMUNICATIONS VAULT" TO "TRAFFIC SIGNAL CABINET":
- 1 OF 1 – 2" CONDUIT: INTERCONNECT

"COMMUNICATIONS VAULT" UPSTREAM/DOWNSTREAM:
- 1 OF 1 – 2" CONDUIT: INTERCONNECT

"SIGNALPOLE PULL BOX" TO "DECTOR PULL BOX"/"DETECTOR WATER VALVE"
- 1 OF 1 – 2" CONDUIT: INDUCTANCE DETECTOR WIRING

NOTE:
THE "TRAFFIC SIGNAL PULL BOX" ON THE CABINET CORNER IS RECOMMENDED TO BE SIZED AT 24"x36"x12" DUE TO THE NUMBER OF CONDUITS ENTERING IT. "TRAFFIC SIGNAL PULL BOXES" ON REMAINING CORNERS ARE RECOMMENDED TO BE SIZED AT 17"x30"x12".

The Town of ERIE COLORADO

DRAWING TITLE: POWER SOURCE SCHEMATIC

DRAWING NUMBER: TS–8

DRAWN BY: W.L. APPROVED BY: G. BEHLEN DATE: 1/2015

NOTES

ALL VEHICLE SIGNAL HEADS SHALL BE POLYCARBONATE WITH 12" SECTIONS AND TUNNEL VISORS.

ALL VEHICLE AND PEDESTRIAN SIGNAL HEADS SHALL BE LED TYPE, EXCEPT FOR ONE SIDE OF POLE RED WHICH SHALL BE INCANDESCENT. HEADS SHALL BE BLACK PEDESTRIAN HEADS SHALL BE COUNTDOWN TYPE.

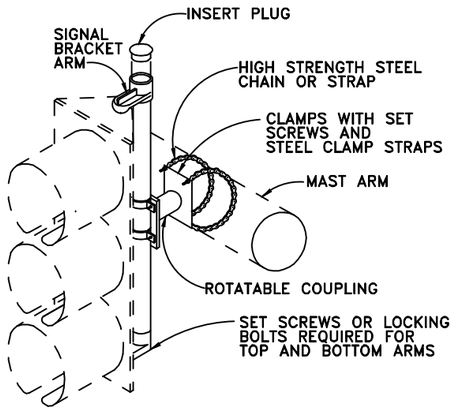

DETAIL OF MAST ARM MOUNTING FOR IN-LINE SIGNAL HEAD (3-SECTION OR 4-SECTION)

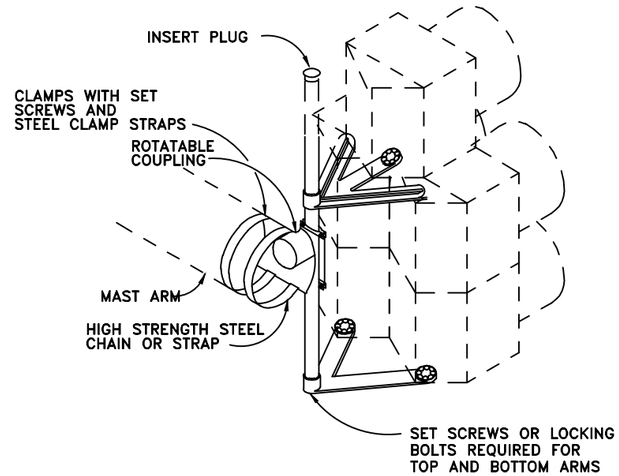

DETAIL OF MAST ARM MOUNTING FOR DOGHOUSE SIGNAL HEAD (5-SECTION)

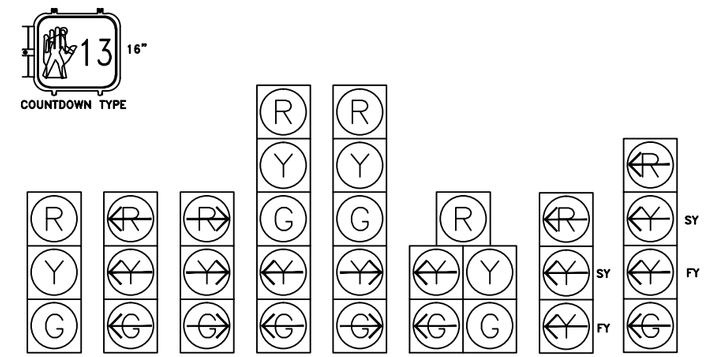

PEDESTRIAN AND VEHICLE SIGNAL HEADS

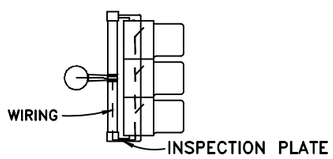

WIRING DIAGRAM

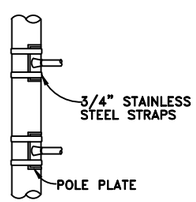

TYPICAL SIDE OF POLE SIGNAL MOUNTING

MOUNTING NOTES

1. PIPE COUPLINGS FOR SIGNAL BRACKETS SHALL BE EITHER 1-1/2 OR 2 INCH DEPENDING UPON THE SIGNAL HEAD TO BE INSTALLED. SIGNAL BRACKETS SHALL BE FURNISHED BY THE MANUFACTURER OF THE SIGNAL HEADS.
2. UNLESS OTHERWISE SPECIFIED, ALL TRAFFIC SIGNALS MOUNTED ABOVE THE ROADWAY SHALL HAVE A HEIGHT OF 17' TO 19' ABOVE THE PAVEMENT GRADE AT THE ROADWAY CENTER, ALL SIDE-OF-POLE MOUNTED TRAFFIC SIGNALS SHALL HAVE A HEIGHT OF 10' ABOVE GROUND LINE AND PEDESTRIAN SIGNALS SHALL HAVE A HEIGHT OF 8' ABOVE GROUND LINE AS MEASURED TO THE BOTTOM OF THE SIGNAL HEAD HOUSING OR BRACKET.
3. MAST ARM MOUNTED SIGNAL HEADS SHALL USE ASTRO-BRAC's OR SKY-BRACK. ALL SIGNAL HEADS SHALL BE MOUNTED IN SUCH A MANNER AS TO BE EASILY REMOVED FROM THEIR SUPPORTING STRUCTURE..
4. GASKET SEALING COMPOUND SHALL BE USED IN ADDITION TO ANY LEAD WASHERS REQUIRED FOR CREATING A WATER-TIGHT CONNECTION BETWEEN THE SIGNAL HEAD AND MOUNTING BRACKET.
5. SIGNAL HEADS SHALL BE SECURELY AFFIXED BY USE OF A SERRATED COUPLING OR OTHER ACCESSORIES RECOMMENDED BY THE SIGNAL MANUFACTURER.
6. WIRING FROM INSIDE MAST ARM THROUGH A 1" FIELD DRILLED HOLE IN ARM SHALL BE BROUGHT THROUGH THE MOUNTING SUPPORT TUBE AND LOWER ARM (AS SHOWN). FIELD DRILLED HOLES SHALL HAVE RUBBER GROMMETS INSTALLED.

GENERAL WIRING NOTES

1. TRAFFIC SIGNAL CONDUIT SHALL NOT CARRY WIRING OF OTHER UTILITIES.
2. EXCEPT FOR LOOP DETECTOR LEADS, ALL SPLICES SHALL BE IN HAND HOLES AT POLE BASES AND NOT IN PULL BOXES.
3. PEDESTRIAN AND VEHICLE SIGNAL HEADS SHALL BE INDIVIDUALLY WIRED FROM THE POLE BASE TO THE SIGNAL HEAD.
4. CONTRACTOR SHALL PROVIDE 2 WIRING DIAGRAMS OF THE SIGNAL INSTALLATION TO THE TOWN.
5. UNLESS ALLOWED BY THE PUBLIC WORKS DIRECTOR, WIRE SHALL NOT OCCUPY MORE THAN 40% OF THE INSIDE AREA OF CONDUIT.

The Town of ERIE COLORADO

DRAWING TITLE: SIGNAL HEAD MOUNTING

DRAWING NUMBER: TS-9

DRAWN BY: W.L. APPROVED BY: G. BEHLEN DATE: 1/2015

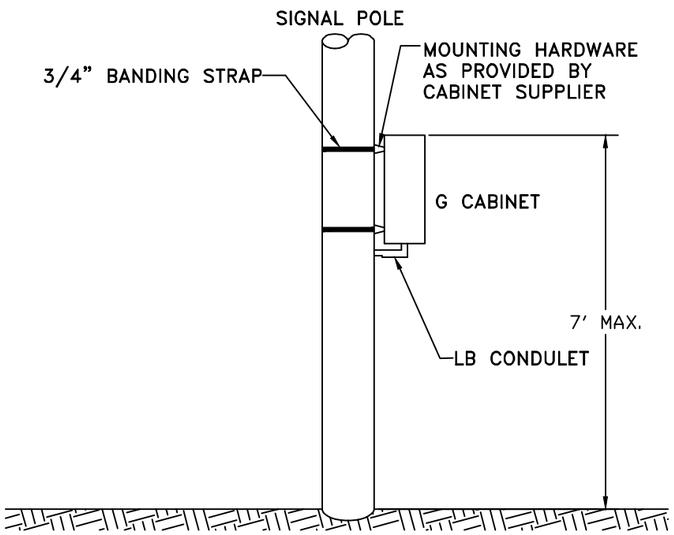

TYPICAL SIDE-OF-POLE MOUNTED CONTROLLER CABINET

CABINET FOUNDATION

	L	D	H
333 SD	44"	29"	24"

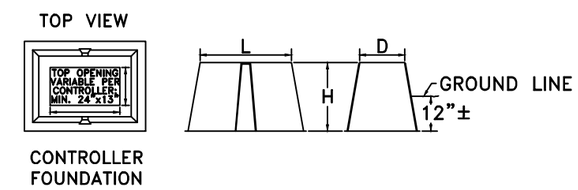

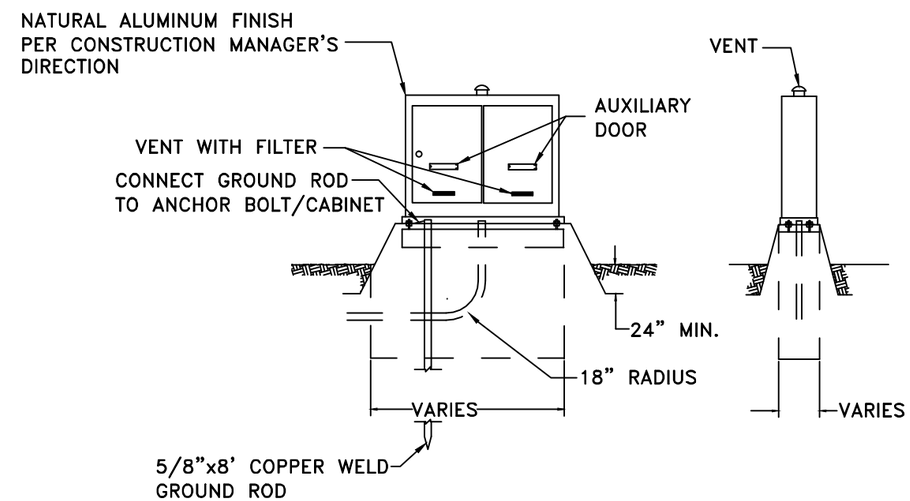

TYPICAL BASE MOUNTED CONTROLLER CABINET INSTALLATION AND FIBERGLASS FOUNDATION

The Town of ERIE COLORADO

DRAWING TITLE: CONTROLLER CABINET

DRAWING NUMBER: TS-10

DRAWN BY: W.L. APPROVED BY: G. BEHLEN DATE: 1/2015

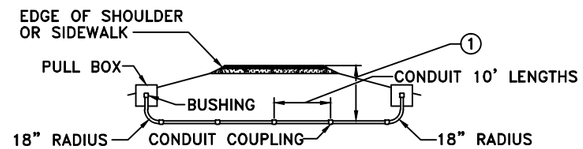

CONDUIT PLACEMENT UNDER PAVEMENT OR SIDEWALK

NOTES

1	MINIMUM CONDUIT DEPTH:	UNDER PAVEMENT 30"	UNDER SIDEWALK 24"

ALL PVC CONDUIT SHALL BE SCHEDULE 80

The Town of ERIE COLORADO

DRAWING TITLE: CONDUIT DETAILS

DRAWING NUMBER: TS-11

DRAWN BY: W.L. APPROVED BY: G. BEHLEN DATE: 1/2015

OPTIONAL SOLAR

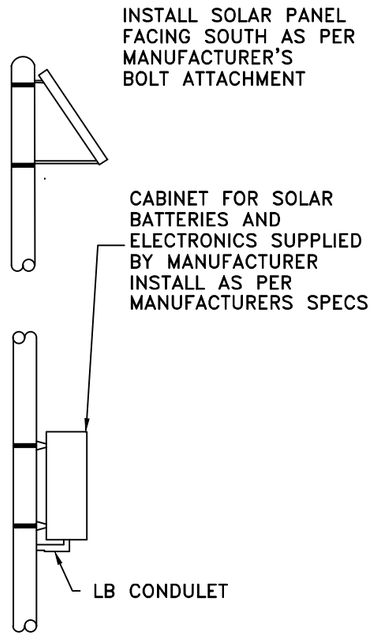

FLASHING BEACONS

ALL FLASHING BEACONS SHALL BE 12" POLYCARBONATE WITH TUNNEL VISORS AND BLACK HOUSINGS

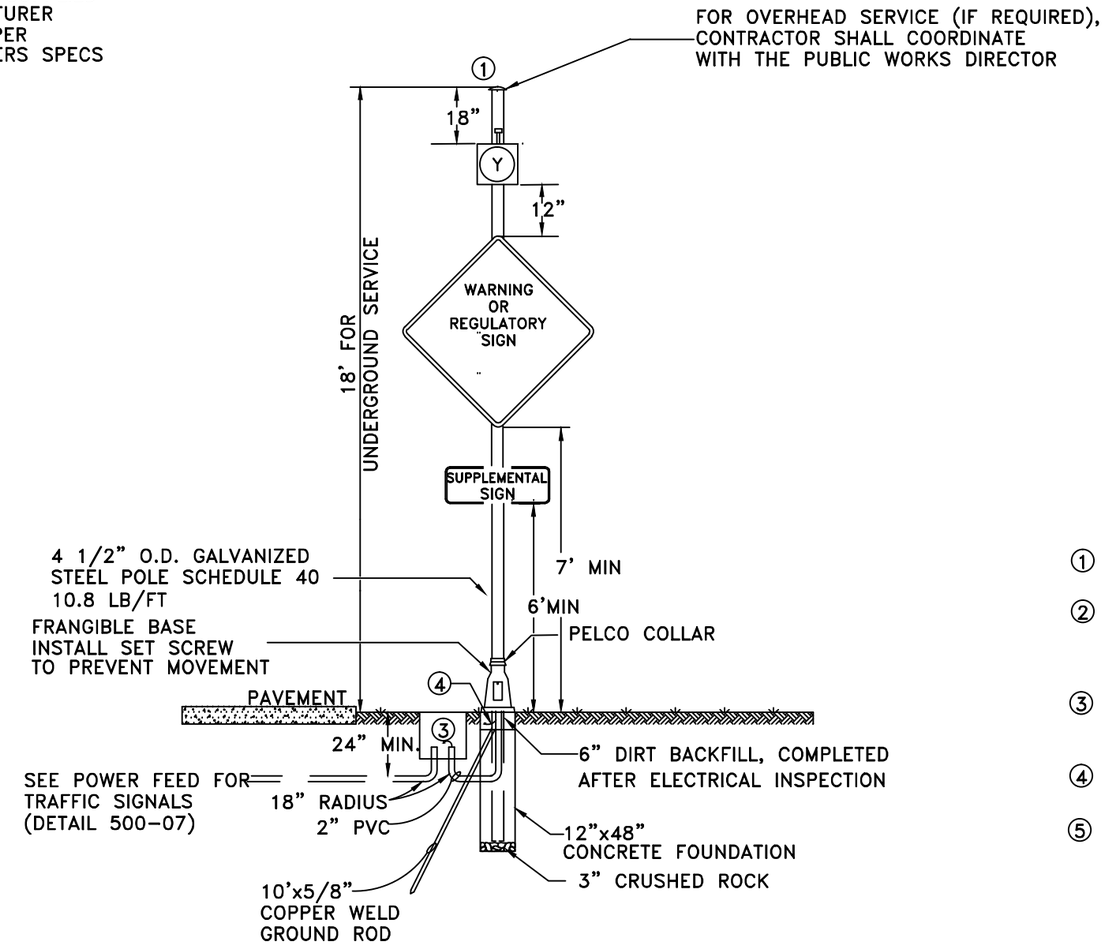

BEACON TOP VIEW

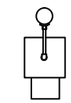

BEACON SIDE VIEW

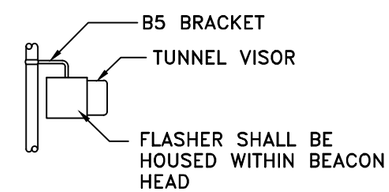

NOTES

1. WATERTIGHT GALVANIZED STEEL POLE CAP
2. LEAVE MINIMUM OF 8' COILED WIRE FOR UTILITY COMPANY CONNECTION AT UTILITY DEMARCATION POINT
3. PROVIDE CONDUIT AND PULL BOX FOR UNDERGROUND SERVICE ONLY
4. BONDING STRAP IN BACKFILL
5. FLASHERS SHALL BE LED

The Town of ERIE COLORADO

DRAWING TITLE: FLASHING BEACON

DRAWING NUMBER: TS-12

DRAWN BY: W.L. APPROVED BY: G. BEHLEN DATE: 1/2015

GENERAL NOTES

1. REFER TO THE ROADWAY PLANS FOR THE ACTUAL CONFIGURATION AND LOCATION OF TRAFFIC SIGNAL HEADS AND SIGNS MARKED WITH A ■ .
2. ALL POLES SHALL BE FABRICATED WITH ASTM A572 GRADE 65 STEEL.
3. ALL ARMS SHALL BE FABRICATED WITH ASTM A572 GRADE 65 STEEL OR ASTM A595 GRADE A STEEL WITH A MINIMUM YIELD POINT OF 55 KSI.
4. ALL POLES AND ARMS SHALL COMPLY WITH THE DIMENSIONAL TOLERANCES SPECIFIED IN ASTM A500, A501, OR A595.
5. ALL POLES AND ARMS SHALL BE ROUND OR DODECAGONAL TUBES WITH A 0.14 IN/FT TAPER.
6. HARDENED WASHERS SHALL CONFORM TO ASTM F436.
7. ALL POLES AND ARMS SHALL BE GALVANIZED INSIDE AND OUTSIDE AFTER FABRICATION IN ACCORDANCE WITH ASTM A123, UNLESS PAINTING IS CALLED FOR ON THE PLANS. PAINTING SHALL CONFORM TO SECTION 522, DUPLEX COATING SYSTEM.
8. POLE AND MAST ARM SPLICES SHALL BE MECHANICALLY FORCED TOGETHER FOR A SNUG FIT.
9. ALL MAST ARMS MORE THAN 35 FT IN LENGTH SHALL BE TWO PIECE CONSTRUCTION TO LIMIT ARM WEIGHTS.
10. GALVANIZED ASTM A325 H.S. BOLTS SHALL BE USED FOR ATTACHING MAST ARMS. A LUBRICATED TIGHTENING TORQUE OF 178 FT-LBS FOR ¾" DIAMETER BOLTS, AND 1300 FT-LBS FOR 1½" INCH DIAMETER BOLTS SHALL BE USED TO TIGHTEN ALL H.S. BOLTS. MAST ARMS SHALL BE TEMPORARILY SUPPORTED TO TAKE LOAD OFF OF FIELD CONNECTIONS WHILE BOLTS ARE TIGHTENED IN ORDER TO FIRMLY SEAT THE FLANGE PLATE. BOLTS SHALL BE SEQUENTIALLY TIGHTENED.
11. CAST POLE END CAP TO BE SECURED IN PLACE WITH 3 SET SCREWS.
12. ALL SIGNAL HEADS, SIGNS, AND HARDWARE SHALL BE FIELD POSITIONED.
13. ACCESSORIES TO BE HOT DIP GALVANIZED IN ACCORDANCE WITH ASTM A153.
14. ALL PLATES SHALL BE FABRICATED WITH AASHTO M270 (ASTM A709) GRADE 36 STEEL AND SHALL COMPLY WITH THE DIMENSIONAL TOLERANCES SPECIFIED IN ASTM A6. ALL HANDHOLES SHALL BE FABRICATED WITH ASTM A572 GRADE 42 STEEL.
15. LEVELING CONCRETE SHALL BE 3000 PSI AIR ENTRAINED CONCRETE VIBRATED IN PLACE BELOW THE POLE BASE PLATE.
16. CAISSONS SHALL BE PLACED AGAINST UNDISTURBED EARTH. WET OR CAVING HOLES SHALL BE BACKFILLED WITH FLOW-FILL AND REDRILLED AFTER A THREE DAY CURING PERIOD WITHOUT THE USE OF A CASING.
17. CAISSONS SHALL BE CONSTRUCTED WITH AIR ENTRAINED CLASS BZ CONCRETE IN ACCORDANCE WITH SECTION 503 OF THE STANDARD SPECIFICATIONS. REINFORCING STEEL SHALL BE GRADE 60.
18. CAISSON CONCRETE SHALL REACH THE SEVEN DAY PREDICTED STRENGTH PRIOR TO INSTALLING THE SIGNAL STRUCTURE.
19. U-BOLTS AND ANCHOR BOLTS SHALL BE FABRICATED WITH AASHTO M314-90 GRADE 55 STEEL.
20. ANCHOR BOLTS SHALL BE FABRICATED WITH HEAVY HEX NUTS AND FLAT WASHERS. THREAD UPPER 12 INCHES AND GALVANIZE UPPER 13 INCHES OF THE ANCHOR BOLTS. FIELD WELDING OF ANCHOR BOLTS TO REBAR DURING ERECTION WILL NOT BE ALLOWED. ANCHOR BOLTS SHALL BE SET WITH A STEEL TEMPLATE UNTIL THE CONCRETE HAS CURED AT LEAST TWO DAYS. THEY SHALL BE TIGHTENED USING THE TURN-OF-NUT METHOD BY FIRST TIGHTENING THEM TO SNUG TIGHT, WHICH IS DEFINED AS THE TIGHTNESS THAT EXISTS WHEN THE UPPER AND LOWER NUTS ARE IN FIRM CONTACT WITH THE BASE PLATE. WITH MAST ARMS FREE TO DEFLECT, THE UPPER AND LOWER NUTS SHALL THEN EACH BE ROTATED AN ADDITIONAL 1/12 TURN (30° ± 5°) WITH A SLUGGING, HYDRAULIC OR AIR IMPACT WRENCH.
21. WELDING OF STEEL SHALL CONFORM TO THE REQUIREMENTS OF ANSI/AWS D1.1. ALL AREAS TO BE WELDED SHALL BE GROUND TO BRIGHT METAL. ALL WELDING AND REQUIRED TESTING SHALL BE COMPLETE BEFORE ANY MATERIAL IS GALVANIZED. ALL CIRCUMFERENTIAL WELDS SHALL BE NON-DESTRUCTIVELY TESTED USING THE ENHANCED MAGNETIC PARTICLE METHOD IN ACCORDANCE WITH SUBSECTION 509.18 (d) OF THE STANDARD SPECIFICATIONS. THE ACCEPTANCE CRITERIA IS STATED IN TABLE 6.1 OF ANSI/AWS D1.1. ALL LONGITUDINAL WELDS WITHIN 6 INCHES OF FULL PENETRATION CIRCUMFERENTIAL GROOVE WELDS AND FULL PENETRATION GROOVE WELDS SHALL BE INSPECTED AS SPECIFIED ABOVE. MAXIMUM WELD UNDERCUT SHALL BE 0.01 INCHES.
22. ALL ELECTRICAL CONNECTIONS TO THE SIGNALS SHALL BE GROUNDED IN ACCORDANCE WITH APPLICABLE ELECTRICAL CODES.
23. CERTIFIED MILL TEST REPORTS INCLUDING CHARPY V-NOTCH (CVN) TEST RESULTS, WELD INSPECTION REPORTS AND ENHANCED MAGNETIC PARTICLE TEST REPORTS SHALL BE SUBMITTED TO CDOT STAFF BRIDGE, 4201 E. ARKANSAS AVE., DENVER COLORADO 80222 AS SOON AS THEY BECOME AVAILABLE. CVN TEST RESULTS FOR ASTM A572 GRADES 42, 55 AND 65 STEEL SHALL HAVE A MINIMUM VALUE OF 15 FT-LBS AT 40°F AS PER THE H FREQUENCY TEST REQUIREMENTS IN AASHTO T243 (ASTM A673).
24. SHOP DRAWINGS SHALL BE SUBMITTED TO THE ENGINEER FOR REVIEW IN ACCORDANCE WITH SUBSECTION 105.02 OF THE STANDARD SPECIFICATIONS.
25. TRAFFIC SIGNALS MOUNTED ON MAST ARMS SHALL BE FURNISHED WITH ASTRO TYPE MOUNTING BRACKETS.
26. END SECTION DIAMETERS MUST BE INCREASED TO ACCOMMODATE OUT-OF-ROUNDNESS, GALVANIZING THICKNESS AND SEAM WELD PROFILES TO PROVIDE THE MINIMUM REQUIRED ARM SLIP SPLICE LENGTHS AND POLE MEMBER OVERLAPS.
27. SECURE ARM FLANGE PLATE, POLE BASE PLATE, AND CONNECTION FACE PLATE DURING WELDING TO PREVENT DISTORTION.
28. IF THE VERTICAL DEFLECTIONS DURING A 10 TO 20 MPH WIND EXCEED THE GALLOPING DEFLECTION LIMITS LISTED IN THE TABLE ON SHEET 2 OF 4, THE OWNER SHALL INSTALL AN ALUMINUM SIGN BLANK (16" X 66" OR LARGER) NEAR THE FREE END OF THE TRAFFIC SIGNAL MAST ARM. SAID SIGN BLANK SHALL BE ROTATED ABOUT THE LONGITUDINAL AXIS OF THE ARM WHILE THE WIND BLOWS TO MINIMIZE THE GALLOPING DEFLECTIONS. CONTACT STAFF BRIDGE FOR MORE INFORMATION.
29. ONE DRILLED HOLE WITH A MAXIMUM DIAMETER OF ¾" IS ALLOWED AT LOCATIONS MARKED WITH A ▲ TO ACCOMMODATE ELECTRICAL WIRING.
30. SEE S-614-42 AND S-614-43 FOR "CABINET FOUNDATION DETAILS" AND "TRAFFIC LOOP AND MISC. SIGNAL DETAILS" RESPECTIVELY.

DESIGN DATA

1. DRAWING SHOWN HAS 5 SIGNAL HEADS, SHORTER ARM LENGTHS MAY HAVE FEWER HEADS. THIS CONFIGURATION IS INTENDED TO REPRESENT A WORST CASE LOADING SITUATION.

(55'), 50'	(45'), 40'	(35'), 30'	(25')
5 SIGNAL HEADS	4 SIGNAL HEADS	3 SIGNAL HEADS	2 SIGNAL HEADS

THE DESIGN LENGTH "L" FOR EACH SERIES IS SHOWN IN PARENTHESIS.

2. THE DESIGNS HEREIN ASSUME THAT SIGNALS ARE INSTALLED WITHIN THE ROADWAY EARTHWORK PRISM WITH THE FOLLOWING SOIL PARAMETERS:
   SOIL DENSITY γ = 110 LB./CU.FT.
   SOIL COHESION = 750 LB./SQ.FT. FOR MEDIUM STIFF COHESIVE SOIL
   SOIL ø ANGLE = 30° FOR MEDIUM DENSE COHESIONLESS SOIL
   SF = 1.25 FOR TORSIONAL RESISTANCE AND 3.0 FOR FLEXURAL RESISTANCE
3. CONTACT THE ENGINEER IF ANY OF THE FOLLOWING SOIL CONDITIONS ARE ENCOUNTERED DURING DRILLING:
   (A) SIGNALS WILL NOT BE INSTALLED WITHIN THE ROADWAY EARTHWORK PRISM.
   (B) THE SOIL HAS A HIGH ORGANIC CONTENT OR CONSISTS OF SATURATED SILT AND CLAY.
   (C) THE SITE WON'T SUPPORT THE WEIGHT OF THE DRILLING RIG.
   (D) THE FOUNDATION SOILS ARE NOT HOMOGENOUS.
   (E) FIRM BEDROCK IS ENCOUNTERED
4. TRAFFIC SIGNAL STRUCTURES HAVE BEEN DESIGNED IN ACCORDANCE WITH THE AASHTO STANDARD SPECIFICATIONS FOR STRUCTURAL SUPPORTS FOR HIGHWAY SIGNS LUMINAIRES, AND TRAFFIC SIGNALS, FOURTH EDITION, 2001.
5. A DESIGN WIND VELOCITY OF 100 MPH AND ONE 12' LANE WITH A 65 MPH TRUCK INDUCED GUST LOADING HAVE BEEN USED FOR THE DESIGNS HEREIN.
6. GALLOPING LOADS ARE EXCLUDED FROM FATIGUE DESIGN AND CATEGORY TWO IMPORTANCE FACTORS HAVE BEEN USED.
7. THE SOCKET WELD OPTION IS LIMITED TO 150% OF THE ALLOWABLE FATIGUE STRESS FOR AN E' WELD IN ORDER TO RECOGNIZE THE BENEFICIAL EFFECTS DERIVED FROM LOAD SHARING BETWEEN THE TWO WELDS.

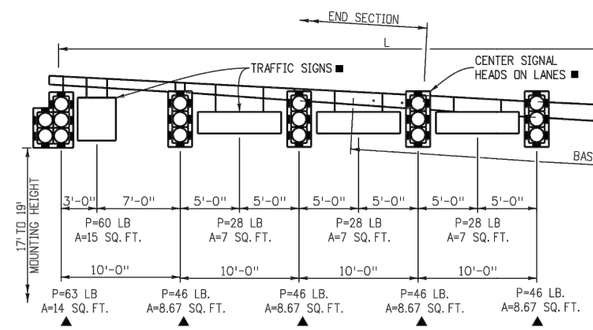

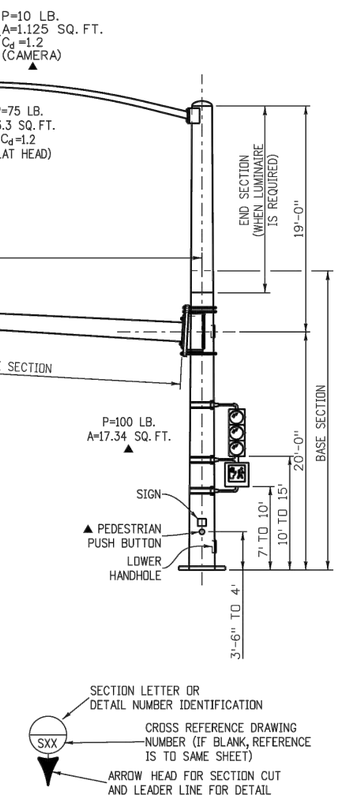

MAST ARM LENGTH (L) (FT.)	POLE DATA							
	BASE SECTION *				END SECTION ◆			
	LENGTH (FT.)	TOP ø (IN.)	BOTTOM ø (IN.)	THK. (IN.)	LENGTH (FT.)	TOP ø (IN.)	BOTTOM ø (IN.)	THK. (IN.)
ALL ARMS	24.47	11.57	15.00	0.3125	16.00	9.90	12.14	0.1793

* BASE SECTION LENGTHS INCLUDE THE SPLICE LENGTH AS PER THE "MAST ARM SLIP SPLICE DETAIL" ON SHEET 2 OF 4

◆ SEE GENERAL NOTE 26

Computer File Information	
Creation Date: 07-04-12	Initials: LAW
Last Modification Date: 07-04-12	Initials: LAW
Full Path: www.coloradodot.info/business/designsupport	
Drawing File Name: Sheet_S-614-40A_1of5.dgn	
CAD Ver.: MicroStation V8 Scale: Not to Scale Units: English	

Sheet Revisions	
Date:	Comments
(R-X)	
(R-X)	
(R-X)	
(R-X)	

Colorado Department of Transportation
4201 East Arkansas Avenue
Denver, Colorado 80222
Phone: (303) 757-9543
Fax: (303) 757-9219
Safety & Traffic Engineering Branch KCM/RLO

ALTERNATE TRAFFIC SIGNAL INSTALLATION DETAILS

Issued By: Safety & Traffic Engineering Branch July 4, 2012

STANDARD PLAN NO.
S-614-40A
Sheet No. 1 of 4

The Town of ERIE COLORADO

DRAWING TITLE: MASTARM POLES (MAX 55')

DRAWING NUMBER: TS-13A

DRAWN BY: W.L. APPROVED BY: G. BEHLEN DATE: 1/2015

MAST ARM LENGTH (L) (FT.)	MAST ARM DATA								GALLOPING DEFLECTION LIMITS (Δ) (IN) ●
	BASE SECTION ✶				END SECTION ◆				
	LENGTH (FT.)	TIP ø (IN.)	TRUNK ø (IN.)	THK (IN.)	LENGTH (FT.)	TIP ø (IN.)	TRUNK ø (IN.)	THK. (IN.)	
25	23.92	6.65	10.00	0.2391	N.A.	N.A.	N.A.	N.A.	✦
35	33.92	7.50	12.25	0.2391	N.A.	N.A.	N.A.	N.A.	✦
45	25.16	9.73	13.25	0.3125	20.00	7.46	10.26	0.1793	6"
55	25.34	11.20	14.75	0.3125	30.00	7.56	11.76	0.1793	11"

✶ BASE SECTION LENGTH INCLUDES THE SPLICE LENGTH AS PER THE "MAST ARM SLIP SPLICE DETAIL" BELOW.
◆ SEE GENERAL NOTE 26 ON SHEET 1 OF 4.
● SEE GENERAL NOTE 28 ON SHEET 1 OF 4.
✦ DEFLECTION TOO SMALL TO MEASURE.
■ STOP ALL WELDS ½" SHORT OF PLATE EDGES AND BOLT HOLES.

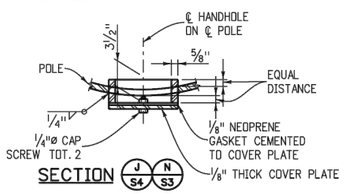

SECTION (J/S4) (N/S3)

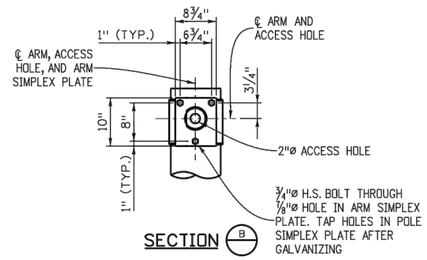

SECTION (B)

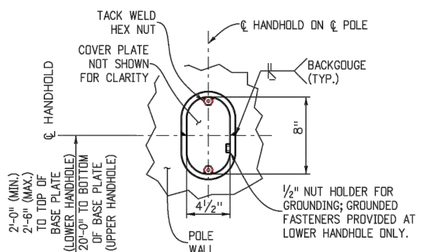

SECTION (M/S3) DETAIL (I/S4)

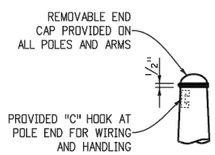

END CAP DETAIL

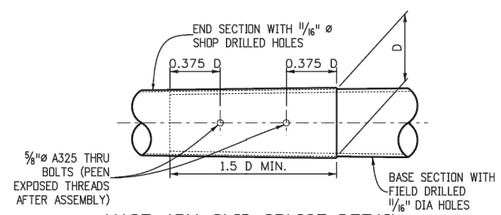

MAST ARM SLIP SPLICE DETAIL

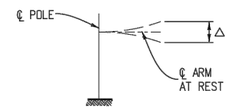

GALLOPING DEFLECTION LIMITS

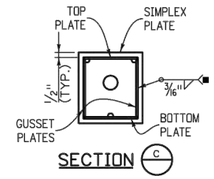

SECTION (C)

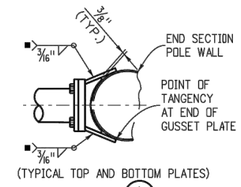

(TYPICAL TOP AND BOTTOM PLATES)

SECTION (A)

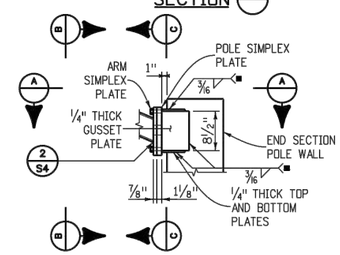

DETAIL (3)

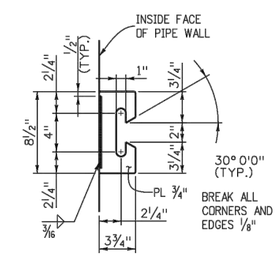

"C" HOOK DETAIL

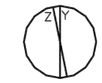

Y = DIAMETER OF A ROUND TUBE.
Z = PERPENDICULAR DISTANCE BETWEEN FLATS.
Y AND Z ARE OUTSIDE DIAMETER DIMENSIONS.
Z/Y RATIO MUST BE .98 MINIMUM.

OPTIONAL MULTI-SIDED POLE OR MAST ARM

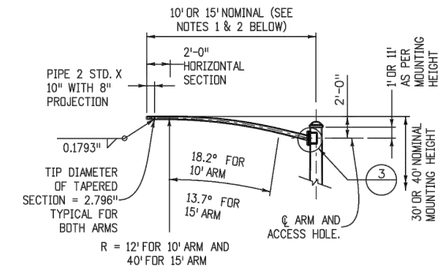

LUMINAIRE ARM NOTES

1. 10' LUMINAIRE ARM SHAFT: WALL THICKNESS = 0.1793"; LINEAR TAPER = 0.14 IN./FT.; DIAMETER AT ARM SIMPLEX PLATE = 4.066".
2. 15' LUMINAIRE ARM SHAFT: WALL THICKNESS = 0.1793"; LINEAR TAPER = 0.14 IN./FT.; DIAMETER AT ARM SIMPLEX PLATE = 4.679".

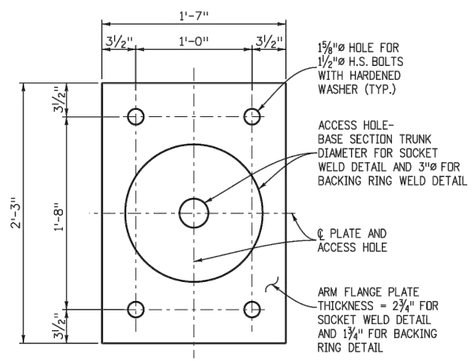

SECTION (D/S3)

Computer File Information		Sheet Revisions	
Creation Date: 07-04-12 Initials: LAW		Date:	Comments
Last Modification Date: 07-04-12 Initials: LAW	R-X		
Full Path: www.coloradodot.info/business/designsupport	R-X		
Drawing File Name: Sheet_S-614-40A_2of5.dgn	R-X		
CAD Ver.: MicroStation V8 Scale: Not to Scale Units: English	R-X		

Colorado Department of Transportation
4201 East Arkansas Avenue
Denver, Colorado 80222
Phone: (303) 757-9543
Fax: (303) 757-9219
Safety & Traffic Engineering Branch KCM/RLO

ALTERNATE TRAFFIC SIGNAL INSTALLATION DETAILS

Issued By: Safety & Traffic Engineering Branch July 4, 2012

STANDARD PLAN NO.
S-614-40A
Sheet No. 2 of 4

The Town of ERIE COLORADO

DRAWING TITLE: MASTARM POLES (MAX 55')
DRAWING NUMBER: TS-13B
DRAWN BY: W.L. APPROVED BY: G. BEHLEN DATE: 1/2015

- ● BEND RADIUS MEASURED TO THE ℄ OF EACH U-BOLT. INCREASE RADII AS NEEDED TO ACCOMODATE OUT-OF-ROUNDNESS, GALVANIZING THICKNESS AND SEAM WELD PROFILES. U-BOLTS SHALL BE TIGHTENED ½ TURN (30° ± 5°) PAST SNUG TIGHT; PEEN THREADS AFTER TIGHTENING. U-BOLTS AND FACEPLATE SHALL BE MOUNTED ON BASE SECTION PRIOR TO SHIPMENT.
- ✚ MATCH FIT STOP BAR TO SIDE PLATE USING TACK WELDS TO ENSURE UNIFORM REARING.
- ■ STOP ALL WELDS ½" SHORT OF PLATE EDGES AND BOLT HOLES.
- ✱ BEND STOP BAR TO MATCH POLE CURVATURE.

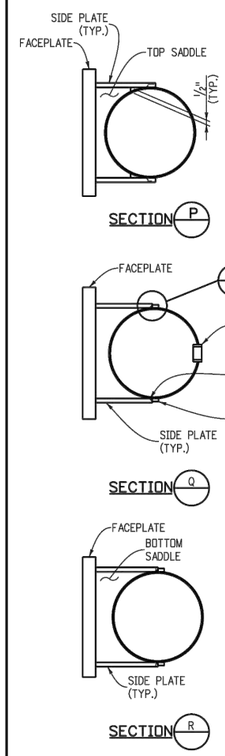

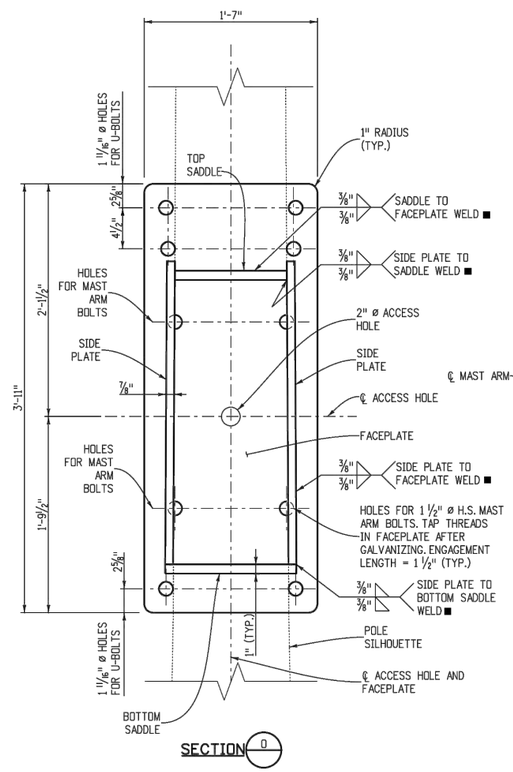

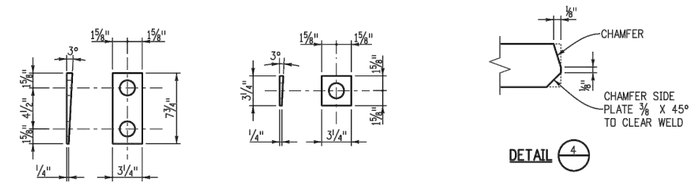

TAPERED WASHER DETAILS

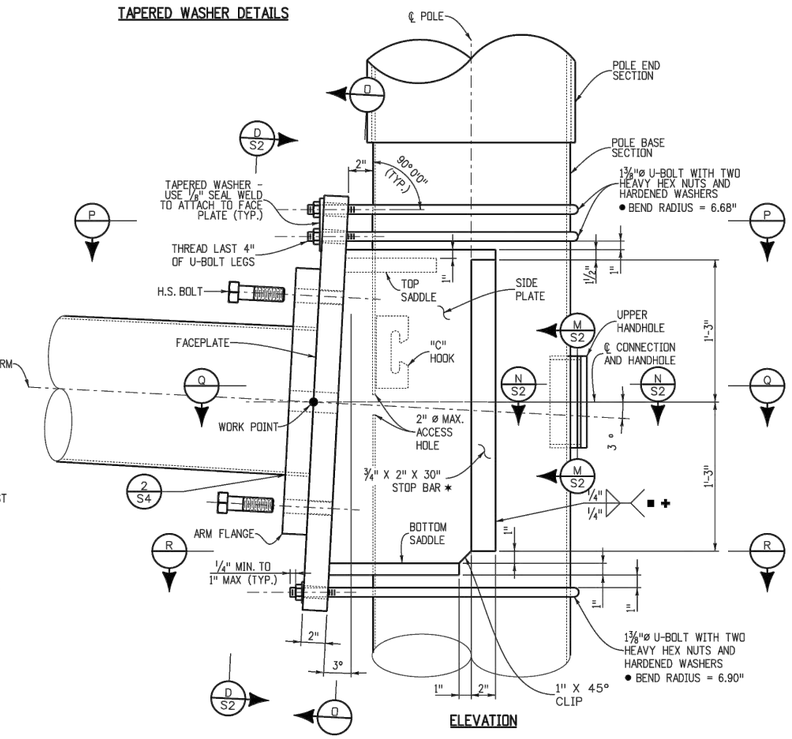

Computer File Information		Sheet Revisions	
Creation Date: 07-04-12	Initials: LAW	Date:	Comments
Last Modification Date: 07-04-12	Initials: LAW	R-X	
Full Path: www.coloradodot.info/business/designsupport		R-X	
Drawing File Name: Sheet_S-614-40A_3of5.dgn		R-X	
CAD Ver.: MicroStation V8 Scale: Not to Scale Units: English		R-X	

Colorado Department of Transportation
4201 East Arkansas Avenue
Denver, Colorado 80222
Phone: (303) 757-9543
Fax: (303) 757-9219
Safety & Traffic Engineering Branch KCM/RLO

ALTERNATE TRAFFIC SIGNAL INSTALLATION DETAILS

Issued By: Safety & Traffic Engineering Branch July 4, 2012

STANDARD PLAN NO.
S-614-40A
Sheet No. 3 of 4

The Town of ERIE COLORADO

DRAWING TITLE: MASTARM POLES (MAX 55')

DRAWING NUMBER: TS-13C

DRAWN BY: W.L. APPROVED BY: G. BEHLEN DATE: 1/2015

SOCKET WELD DATA					
	ARM LENGTH (FT.)	W_1 (IN.)	W_2 (IN.)	E (IN.)	θ (DEG.)
MAST ARMS	25	0.2391	0.285	0.183	40
	35	0.2391	0.285	0.183	40
	45	0.3125	0.372	0.239	40
	55	0.3125	0.372	0.239	40
POLE	ALL	0.3125	0.372	0.239	40
LUMINAIRE ARMS	ALL	0.1793	0.214	0.138	40

BACKING RING WELD DATA					
	ARM LENGTH (FT.)	W_1 (IN.)	W_2 (IN.)	E (IN.)	θ (DEG.)
MAST ARMS	25	0.1196	0.489	0.289	14
	35	0.1196	0.489	0.289	14
	45	0.1566	0.563	0.385	16
	55	0.1566	0.563	0.385	16
POLE	ALL	0.1566	0.563	0.385	16
LUMINAIRE ARMS	ALL	0.0897	0.429	0.212	12

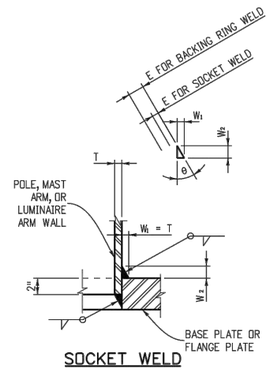

SOCKET WELD

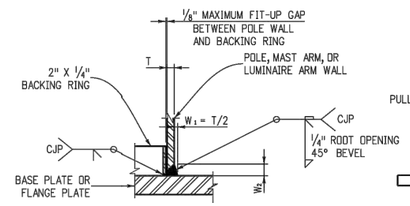

BACKING RING WELD

DETAIL 2 S2 S3

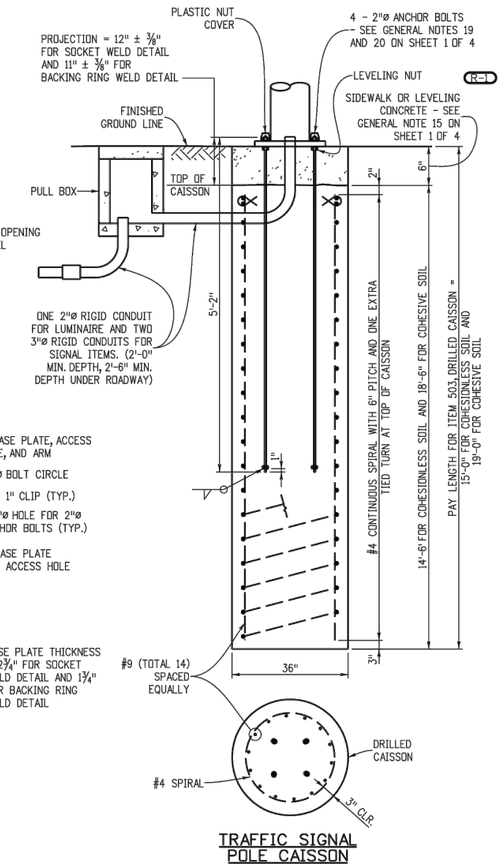

TRAFFIC SIGNAL POLE CAISSON

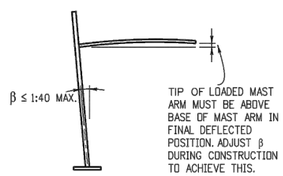

CONSTRUCTION REQUIREMENTS

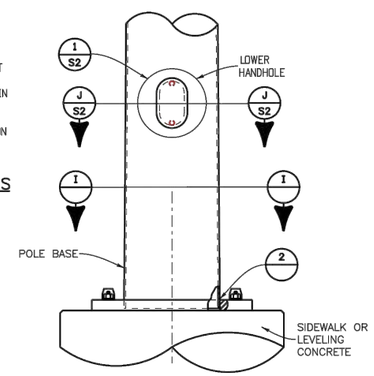

BASE PLATE DETAIL

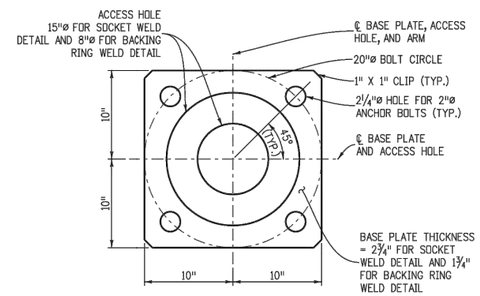

SECTION I

Computer File Information		Sheet Revisions	
Creation Date: 07-04-12 Initials: LAW		Date:	Comments
Last Modification Date: 09-25-12 Initials: LAW	R-1	9-25-12	Correct sheet references
Full Path: www.coloradodot.info/business/designsupport	R-X		
Drawing File Name: Sheet_S-614-40A_4of5.dgn	R-X		
CAD Ver.: MicroStation V8 Scale: Not to Scale Units: English	R-X		

Colorado Department of Transportation
4201 East Arkansas Avenue
Denver, Colorado 80222
Phone: (303) 757-9543
Fax: (303) 757-9219
Safety & Traffic Engineering Branch KCM/RLO

ALTERNATE TRAFFIC SIGNAL INSTALLATION DETAILS

Issued By: Safety & Traffic Engineering Branch July 4, 2012

STANDARD PLAN NO.
S-614-40A
Sheet No. 4 of 4

The Town of ERIE COLORADO

DRAWING TITLE: MASTARM POLES (MAX 55')

DRAWING NUMBER: TS-13D

DRAWN BY: W.L. APPROVED BY: G. BEHLEN DATE: 1/2015

GENERAL NOTES

1. REFER TO ROADWAY PLANS FOR THE ACTUAL CONFIGURATION AND LOCATION OF TRAFFIC SIGNAL HEADS AND SIGNS MARKED WITH A ■ .
2. ALL POLES AND ARMS SHALL BE FABRICATED WITH ASTM A572 GRADE 65 STEEL. LUMINAIRE ARMS MAY BE FABRICATED WITH ASTM A595 GRADE A STEEL WITH A MINIMUM YIELD POINT OF 55 KSI.
3. ALL POLES AND ARMS SHALL COMPLY WITH THE DIMENSIONAL TOLERANCES SPECIFIED IN ASTM A500, A501, OR A595.
4. ALL POLES AND ARMS SHALL BE ROUND OR DODECAGONAL TUBES WITH A 0.14 IN/FT TAPER.
5. HARDENED WASHERS SHALL CONFORM TO ASTM F436.
6. ALL POLES AND ARMS SHALL BE GALVANIZED INSIDE AND OUTSIDE AFTER FABRICATION IN ACCORDANCE WITH ASTM A123, UNLESS PAINTING IS CALLED FOR ON THE PLANS. PAINTING SHALL CONFORM TO SECTION 522, DUPLEX COATING SYSTEM.
7. POLE AND MAST ARM SPLICES SHALL BE MECHANICALLY FORCED TOGETHER FOR A SNUG FIT.
8. BLIND BOLTS SHALL BE A307 GRADE A STEEL AND ARE NOT REQUIRED FOR MULTISIDED POLES. MECHANICAL ALTERNATIVES TO BLIND BOLTS UTILIZING FRICTION, KEYS, INTERLOCKING TEETH OR A COMBINATION THEREOF TO PREVENT THE BUILT-UP BOX FROM TWISTING ON THE POLE MAY BE USED AS APPROVED BY CDOT STAFF BRIDGE.
9. ALL MAST ARMS MORE THAN 40 FT IN LENGTH SHALL BE TWO PIECE CONSTRUCTION TO LIMIT ARM WEIGHTS.
10. GALVANIZED ASTM A325 H.S. BOLTS SHALL BE USED FOR ATTACHING LUMINAIRE AND MAST ARMS. A LUBRICATED TIGHTENING TORQUE OF 178 FT-LBS FOR ¾" DIAMETER BOLTS, 395 FT-LBS FOR 1" DIAMETER BOLTS AND 1300 FT-LBS FOR 1½" DIAMETER BOLTS SHALL BE USED TO TIGHTEN ALL H.S. BOLTS. MAST ARMS SHALL BE TEMPORARILY SUPPORTED TO TAKE LOAD OFF OF FIELD CONNECTIONS WHILE BOLTS ARE TIGHTENED IN ORDER TO FIRMLY SEAT THE FLANGE PLATE. BOLTS SHALL BE SEQUENTIALLY TIGHTENED. ASSUMING 12 BOLTS AND A CLOCK FACE, THE TIGHTENING SEQUENCE WOULD BE 12, 6, 1, 7, ETC. THIS PROCESS SHALL BE CONTINUED UNTIL NO LOOSE BOLTS ARE FOUND AFTER ALL BOLTS HAVE BEEN INITIALLY TIGHTENED.
11. CAST POLE END CAP TO BE SECURED IN PLACE WITH 3 SET SCREWS.
12. ALL SIGNAL HEADS, SIGNS, AND HARDWARE SHALL BE FIELD POSITIONED.
13. ACCESSORIES TO BE HOT DIP GALVANIZED IN ACCORDANCE WITH ASTM A153.
14. ALL PLATES AND STIFFENERS SHALL BE FABRICATED WITH AASHTO M270 (ASTM A709) GRADE 36 STEEL AND SHALL COMPLY WITH THE DIMENSIONAL TOLERANCES SPECIFIED IN ASTM A6. ALL HANDHOLES SHALL BE FABRICATED WITH ASTM A572 GRADE 42 STEEL.
15. LEVELING CONCRETE SHALL BE 3000 PSI AIR ENTRAINED CONCRETE VIBRATED IN PLACE BELOW THE POLE BASE PLATE.
16. THE DESIGNS HEREIN ASSUME THAT SIGNALS ARE INSTALLED WITHIN THE ROADWAY EARTHWORK PRISM WITH THE FOLLOWING SOIL PARAMETERS:
    SOIL DENSITY γ = 110 LB./CU.FT.
    SOIL COHESION = 750 LB./SQ.FT. FOR MEDIUM STIFF COHESIVE SOIL
    SOIL Ø ANGLE = 30° FOR MEDIUM DENSE COHESIONLESS SOIL
    SF = 1.5 FOR TORSIONAL RESISTANCE AND 3.0 FOR FLEXURAL RESISTANCE
17. CONTACT THE ENGINEER IF ANY OF THE FOLLOWING SOIL CONDITIONS ARE ENCOUNTERED DURING DRILLING:
    (A) SIGNALS WILL NOT BE INSTALLED WITHIN THE ROADWAY EARTHWORK PRISM.
    (B) THE SOIL HAS A HIGH ORGANIC CONTENT OR CONSISTS OF SATURATED SILT AND CLAY.
    (C) THE SITE WON'T SUPPORT THE WEIGHT OF THE DRILLING RIG.
    (D) THE FOUNDATION SOILS ARE NOT HOMOGENOUS.
    (E) FIRM BEDROCK IS ENCOUNTERED.
18. CAISSONS SHALL BE PLACED AGAINST UNDISTURBED EARTH. WET OR CAVING HOLES SHALL BE BACKFILLED WITH FLOW-FILL AND REDRILLED AFTER A THREE DAY CURING PERIOD WITHOUT THE USE OFA CASING.
19. CAISSONS SHALL BE CONSTRUCTED WITH AIR ENTRAINED CLASS BZ CONCRETE IN ACCORDANCE WITH SECTION 503 OF THE STANDARD SPECIFICATIONS. REINFORCING STEEL SHALL BE GRADE 60.
20. CAISSON CONCRETE SHALL REACH THE SEVEN DAY PREDICTED STRENGTH PRIOR TO INSTALLING THE SIGNAL STRUCTURE.
21. U-BOLTS AND ANCHOR BOLTS SHALL BE FABRICATED WITH AASHTO M314-90 GRADE 55 STEEL.
22. ANCHOR BOLTS SHALL BE FABRICATED WITH HEAVY HEX NUTS AND FLAT WASHERS. THREAD UPPER 12 INCHES AND GALVANIZE UPPER 13 INCHES OF THE ANCHOR BOLTS. FIELD WELDING OF ANCHOR BOLTS TO REBAR DURING ERECTION WILL NOT BE ALLOWED. ANCHOR BOLTS SHALL BE SET WITH A STEEL TEMPLATE UNTIL THE CONCRETE HAS CURED AT LEAST TWO DAYS. THE ANCHOR BOLTS SHALL BE TIGHTENED USING THE TURN-OF-NUT METHOD. THE BOLTS SHALL FIRST BE TIGHTENED TO SNUG TIGHT, WHICH IS DEFINED AS THE TIGHTNESS THAT EXISTS WHEN THE UPPER AND LOWER NUTS ARE IN FIRM CONTACT WITH THE BASE PLATE. WITH MAST ARMS FREE TO DEFLECT, THE UPPER AND LOWER NUTS SHALL THEN EACH BE ROTATED AN ADDITIONAL ½ TURN (30° ± °5) WITH A SLUGGING, HYDRAULIC OR AIR IMPACT WRENCH.
23. WELDING OF STEEL SHALL CONFORM TO THE REQUIREMENTS OF ANSI/AWS D1.1. ALL AREAS TO BE WELDED SHALL BE GROUND TO BRIGHT METAL. ALL WELDING AND REQUIRED TESTING SHALL BE COMPLETE BEFORE ANY MATERIAL IS GALVANIZED. ALL CIRCUMFERENTIAL AND STIFFENER WELDS SHALL BE NON-DESTRUCTIVELY TESTED USING THE ENHANCED MAGNETIC PARTICLE METHOD IN ACCORDANCE WITH SUBSECTION 509.18 (d) OF THE STANDARD SPECIFICATIONS. THE ACCEPTANCE CRITERIA IS STATED IN TABLE 6.1 OF ANSI/AWS D1.1. ALL LONGITUDINAL WELDS WITHIN 6 INCHES OF FULL PENETRATION CIRCUMFERENTIAL GROOVE WELDS AND FULL PENETRATION GROOVE WELDS SHALL BE INSPECTED AS SPECIFIED ABOVE. MAXIMUM WELD UNDERCUT SHALL BE 0.01 INCHES.
24. ALL ELECTRICAL CONNECTIONS TO THE SIGNALS SHALL BE GROUNDED IN ACORDANCE WITH APPLICABLE ELECTRICAL CODES.
25. TRAFFIC SIGNAL STRUCTURES HAVE BEEN DESIGNED IN ACCORDANCE WITH THE AASHTO STANDARD SPECIFICATIONS FOR STRUCTURAL SUPPORTS FOR HIGHWAY SIGNS, LUMINAIRES, AND TRAFFIC SIGNALS, FOURTH EDITION, 2001.
26. A DESIGN WIND VELOCITY OF 100 MPH AND ONE 12' LANE WITH A 65 MPH TRUCK INDUCED GUST LOADING HAVE BEEN USED FOR THE DESIGNS HEREIN.
27. CERTIFIED MILL TEST REPORTS INCLUDING CHARPY V-NOTCH TEST RESULTS, WELD INSPECTION REPORTS AND ENHANCED MAGNETIC PARTICLE TEST REPORTS SHALL BE SUBMITTED TO CDOT STAFF BRIDGE, 4201 E. ARKANSAS AVE. DENVER, COLORADO 80222 AS SOON AS THEY BECOME AVAILABLE. CVN TEST RESULTS FOR ASTM A572 GRADES 42 AND 65 STEEL SHALL HAVE A MINIMUM VALUE OF 15 FT-LBS AT 40°F AS PER THE H FREQUENCY TEST REQUIREMENTS IN AASHTO T243 (ASTM A673).
28. SHOP DRAWINGS SHALL BE SUBMITTED TO THE ENGINEER FOR REVIEW IN ACCORDANCE WITH SUBSECTION 105.02 OF THE STANDARD SPECIFICATIONS.
29. DEFINITIONS: U.O.N. = UNLESS OTHERWISE NOTED
    W.P. = WORK POINT
30. TRAFFIC SIGNALS MOUNTED ON MAST ARMS SHALL BE FURNISHED WITH ASTRO TYPE MOUNTING BRACKETS.
31. END SECTION DIAMETERS MUST BE INCREASED TO ACCOMMODATE OUT-OF-ROUNDNESS, GALVANIZING THICKNESS AND SEAM WELD PROFILES TO PROVIDE THE MINIMUM REQUIRED ARM SLIP SPLICE LENGTHS AND POLE MEMBER OVERLAPS.
32. USE 35' OF ⅜" HIGH STRENGTH CHAIN (SAFE WORKING LOAD OF 5,000 LB.), TWO "S" SHAPED HOOKS PROPERLY FORGED FROM 1" SQUARE BAR STOCK AND TWO 4,000 LB. CAPACITY COME-ALONGS TO SEAT THE POLE END SECTION ON ITS BASE SECTION BY ATTACHING THE COME-ALONGS TO OPPOSING ACCESS HOLES IN THE BUILT-UP BOX WITH THE "S" SHAPED HOOKS AND PULLING AGAINST THE CHAIN WHICH IS STRUNG UNDERNEATH THE POLE BASE PLATE. APPLY ENOUGH FORCE TO ALIGN THE WIRE ACCESS HOLES AND TO SEAT THE SLIP SPLICE WITHIN 4" OF THE SPECIFIED LENGTH.
33. SECURE ARM FLANGE PLATE, POLE BASE PLATE, AND CONNECTION FACEPLATE DURING WELDING TO PREVENT DISTORTION.
34. ONE DRILLED HOLE WITH A MAXIMUM DIAMETER OF ¾" IS ALLOWED AT LOCATIONS MARKED WITH A ▲ TO ACCOMMODATE ELECTRICAL WIRING.
35. SEE S-614-42 AND S-614-43 FOR "CABINET FOUNDATION DETAILS" AND "TRAFFIC LOOP AND MISC. SIGNAL DETAILS" RESPECTIVELY.

DESIGN DATA

1. DRAWING SHOWN HAS 5 SIGNAL HEADS, SHORTER ARM LENGTHS MAY HAVE FEWER HEADS. THIS CONFIGURATION IS INTENDED TO REPRESENT A WORST CASE LOADING CONDITION.

70', (75')	55', 60', (65')	45', (50')	35', (40')	25', (30')
5 SIGNAL HEADS	5 SIGNAL HEADS	4 SIGNAL HEADS	3 SIGNAL HEADS	2 SIGNAL HEADS

THE DESIGN LENGTH "L" FOR EACH SERIES IS SHOWN IN PARENTHESIS.

2. FOR THE TWIN MAST ARM CONNECTION, THE SECOND ARM IS ASSUMED TO BE WITHIN 60° TO 120° OF THE PRIMARY ARM AND IS ASSUMED TO BE LOADED WITH THE SAME LOADS AS SHOWN ABOVE. THE SECONDARY ARM MAY BE THE SAME LENGTH AS OR SHORTER THAN THE PRIMARY ARM.

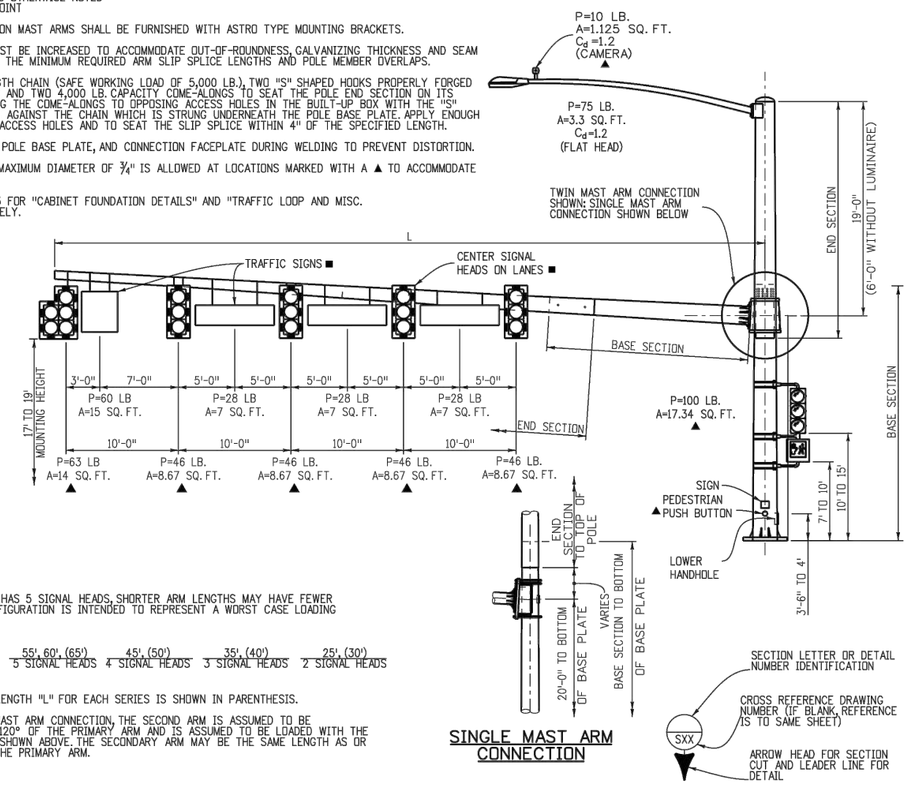

SINGLE MAST ARM CONNECTION

Computer File Information			Sheet Revisions	
Creation Date: 07-04-12	Initials: LAW		Date:	Comments
Last Modification Date: 07-04-12	Initials: LAW	R-X		
Full Path: www.coloradodot.info/business/designsuppor		R-X		
Drawing File Name: Sheet_S-614-40_1of5.dgn		R-X		
CAD Ver.: MicroStation V8 Scale: Not to Scale	Units: English	R-X		

Colorado Department of Transportation
4201 East Arkansas Avenue
Denver, Colorado 80222
Phone: (303) 757-9543
Fax: (303) 757-9219
Safety & Traffic Engineering Branch KCM/RLO

TYPICAL TRAFFIC SIGNAL INSTALLATION DETAILS

Issued By: Safety & Traffic Engineering Branch July 4, 2012

STANDARD PLAN NO.
S-614-40
Sheet No. 1 of 5

The Town of ERIE COLORADO

DRAWING TITLE: MASTARM POLES (>55'& DOUBLES

DRAWING NUMBER: TS-14A

DRAWN BY: W.L. APPROVED BY: G. BEHLEN DATE: 1/2015

MAST ARM LENGTH (L) (FT.)	MAST ARM DATA								MAST ARM CONNECTION DATA															
	BASE SECTION *				END SECTION ◆				STIFFENER								FLANGE			BOLT				
	LENGTH (FT.)	TIP ø (IN.)	TRUNK ø (IN.)	THK. (IN.)	LENGTH (FT.)	TIP ø (IN.)	TRUNK ø (IN.)	THK. (IN.)	NO. OF	THK. (IN.)	WIDTH (IN.)	HEIGHT (IN.)	RADIUS (IN.)	ANGLE	WALL WELD (IN.)	PLATE WELD (IN.)	DIA. (IN.)	THK. (IN.)	SOCKET WELD (IN.)	NO. OF	DIA. (IN.)	CIRCLE DIA. (IN.)	HOLE DIA. (IN.)	ANGLE
30	29.25	6.50	10.59	0.1793	N.A.	N.A.	N.A.	N.A.	6	0.50	3.5	7	6.89	30.0°	0.179	0.375	20	1.00	0.179	6	1.0	16	1.125	60.0°
40	39.11	6.50	11.98	0.2391	N.A.	N.A.	N.A.	N.A.	8	0.50	4.0	8	8.12	22.5°	0.239	0.375	23	1.25	0.239	8	1.5	17	1.625	45.0°
50	25.15	9.47	12.99	0.3125	25	6.50	10.00	0.1793	8	0.75	4.0	8	8.12	22.5°	0.250	0.625	24	1.50	0.250	8	1.5	18	1.625	45.0°
65	25.35	12.52	16.07	0.3125	40	7.50	13.10	0.1793	8	0.75	5.0	10	10.60	22.5°	0.250	0.625	29	1.75	0.250	8	1.5	23	1.625	45.0°
75	35.23	12.52	17.45	0.3125	40	7.50	13.10	0.1793	10	0.75	5.5	11	11.84	18.0°	0.250	0.625	31	1.75	0.250	10	1.5	25	1.625	36.0°

* BASE SECTION LENGTH INCLUDES THE SPLICE LENGTH AS PER THE "MAST ARM SLIP SPLICE DETAIL" BELOW.
◆ SEE GENERAL NOTE 31 ON SHEET 1 OF 5.
■ STOP ALL WELDS ½" SHORT OF PLATE EDGES AND BOLT HOLES.
● 3¾" FOR 30' ARM UPPER HANDHOLE.

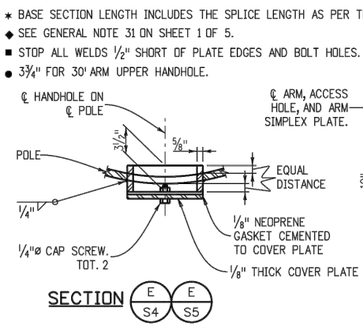

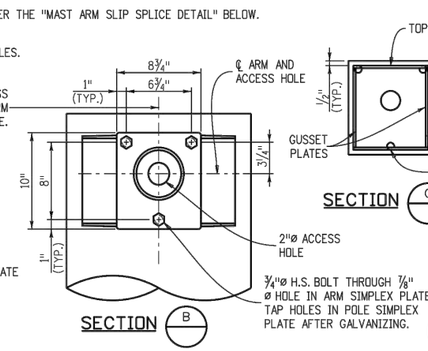

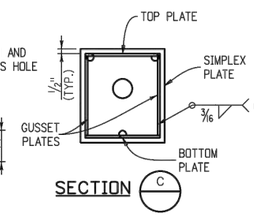

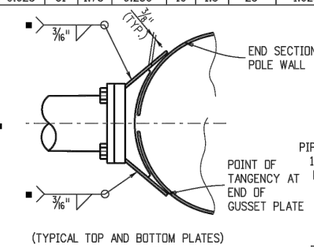

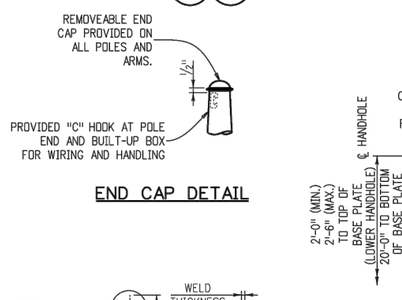

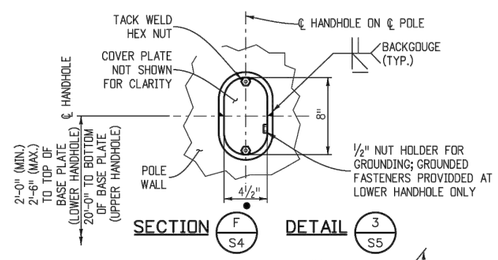

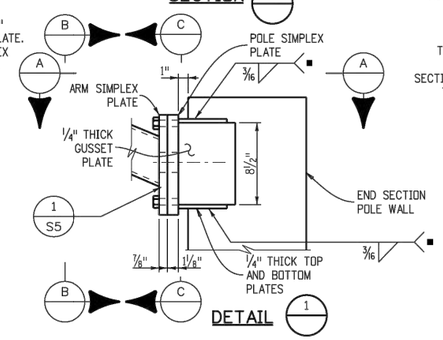

Y = DIAMETER OF A ROUND TUBE.
Z = PERPENDICULAR DISTANCE BETWEEN FLATS.
Y AND Z ARE OUTSIDE DIAMETER DIMENSIONS.
Z/Y RATIO MUST BE .98 MINIMUM.

OPTIONAL MULTI-SIDED POLE OR MAST ARM

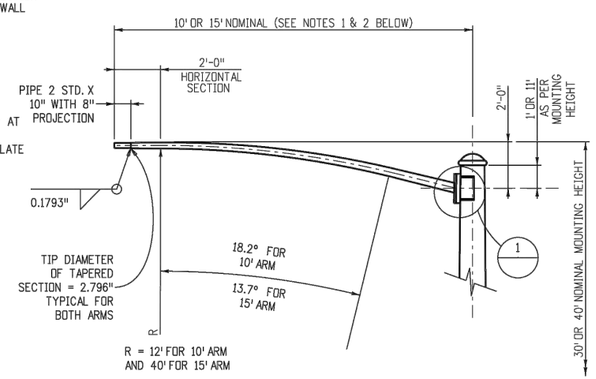

LUMINAIRE ARM NOTES

1. 10' LUMINAIRE ARM SHAFT: WALL THICKNESS = 0.1793"; LINEAR TAPER = 0.14 IN./FT.; DIAMETER AT ARM SIMPLEX PLATE = 4.066"
2. 15' LUMINAIRE ARM SHAFT: WALL THICKNESS = 0.1793"; LINEAR TAPER = 0.14 IN./FT.; DIAMETER AT ARM SIMPLEX PLATE = 4.679".

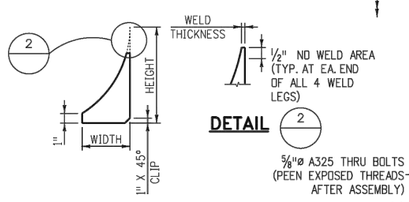

STIFFENER DETAIL

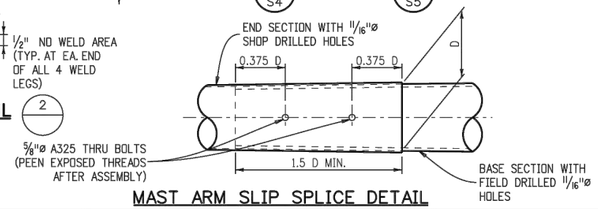

MAST ARM SLIP SPLICE DETAIL

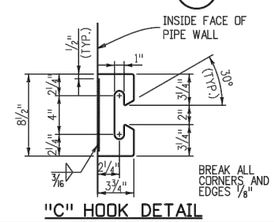

"C" HOOK DETAIL

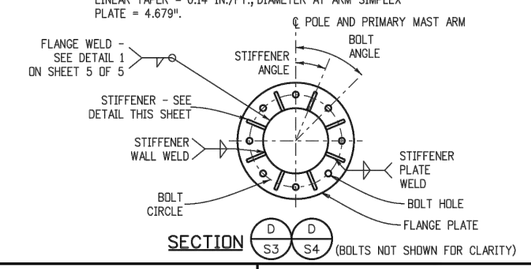

Computer File Information		Sheet Revisions	
Creation Date: 07-04-12 Initials: LAW		Date:	Comments
Last Modification Date: 07-04-12 Initials: LAW	R-X		
Full Path: www.coloradodot.info/business/designsupport	R-X		
Drawing File Name: Sheet_S-614-40_2of5.dgn	R-X		
CAD Ver.: MicroStation V8 Scale: Not to Scale Units: English	R-X		

Colorado Department of Transportation
4201 East Arkansas Avenue
Denver, Colorado 80222
Phone: (303) 757-9543
Fax: (303) 757-9219
Safety & Traffic Engineering Branch KCM/RLO

TYPICAL TRAFFIC SIGNAL INSTALLATION DETAILS

Issued By: Safety & Traffic Engineering Branch July 4, 2012

STANDARD PLAN NO.
S-614-40
Sheet No. 2 of 5

The Town of ERIE COLORADO

DRAWING TITLE: MASTARM POLES (>55'&DOUBLES)
DRAWING NUMBER: TS-14B
DRAWN BY: W.L. APPROVED BY: G. BEHLEN DATE: 1/2015

MAST ARM LENGTH (FT.)	BUND BOLD DATA				BUILT-UP BOX DATA *					POLE DATA							
							SIDE PLATE	TOP PLATE	BOTTOM PLATE	BASE SECTION				END SECTION ◆ WITH LUMINAIRE			
	NO. OF	DIA. (IN.)	BOLTS PER ROW	NO. OF ROWS	THICKNESS OF BOX PLATES U.O.N. (IN.)	POLE WELD (IN.)	H (IN.)	WIDTH FOR θ = 45° (IN.)	WIDTH FOR θ = 45° (IN.)	LENGTH (FT.)	TOP ø (IN.)	BOTTOM ø (IN.)	THK. (IN.)	LENGTH (FT.)	TOP ø (IN.)	BOTTOM ø (IN.)	THK. (IN.)
30	24	0.75	6	4	1.50	0.1875	22	23.75	26.053	22.29	9.11	12.23	0.3125	20.54	7.25	10.13	0.2391
40	30	0.75	6	5	2.00	0.1875	25	26.75	29.367	22.67	11.81	14.98	0.3125	20.71	10.00	12.90	0.2391
50	36	0.75	12	3	2.50	0.1875	26	27.75	30.471	22.33	14.86	17.98	0.3125	20.79	13.00	15.91	0.2391
65	48	0.75	12	4	2.75	0.1875	31	32.75	35.995	22.77	18.54	21.73	0.3125	21.02	16.75	19.69	0.2391
75	60	0.75	12	5	3.00	0.1875	33	34.75	38.204	23.08	20.75	23.98	0.3125	21.12	19.00	21.96	0.2391

* USE LARGER ARM IN A DOUBLE ARM SIGNAL TO DETERMINE PLATE THICKNESS AND DIMENSIONS.
◆ SEE GENERAL NOTE 31 ON SHEET 1 OF 5

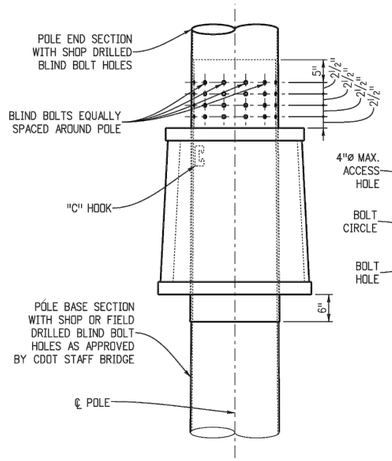

POLE END SECTION
SLIP CONNECTION DETAIL
(SEE GENERAL NOTE 8 ON SHEET 1 OF 5 REGARDING THE NEED FOR BLIND BOLTS)

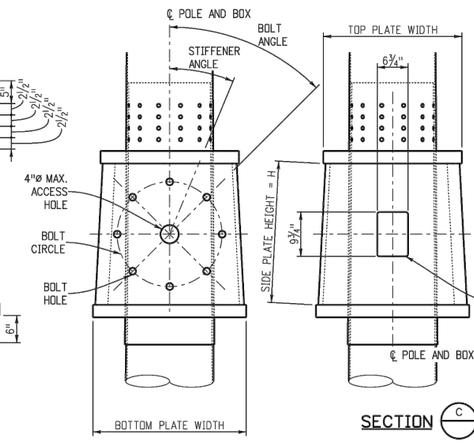

SECTION B

FOR 8 BOLTS AND θ < 45°, ROTATE FLANGE FOR SECONDARY ARM 22.5° TO AVOID BOLT INTERFERENCE PROBLEMS.

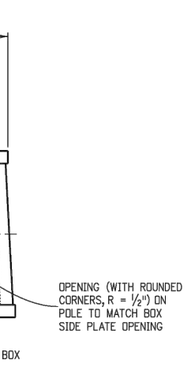

SECTION C

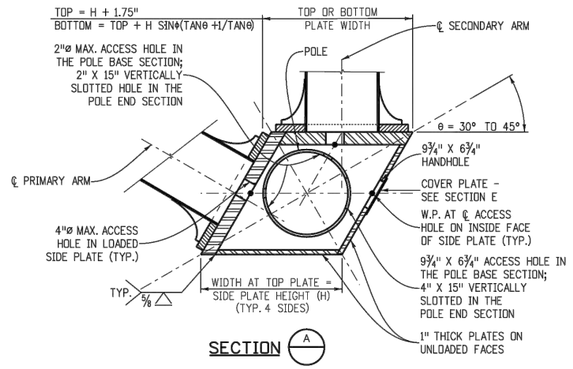

SECTION A

DRAWN WITH θ = 30°

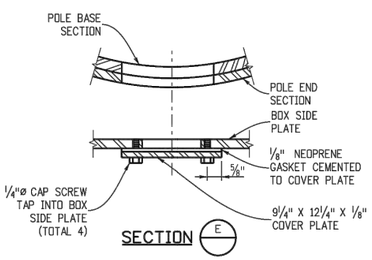

SECTION E

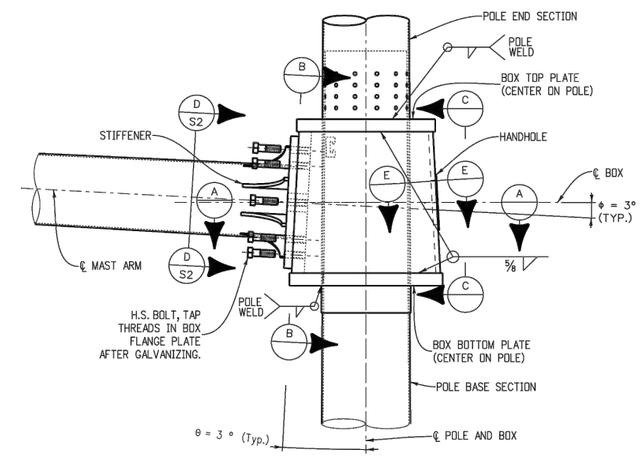

MAST ARM CONNECTION DETAIL

Computer File Information		
Creation Date: 07-04-12	Initials: LAW	
Last Modification Date: 07-04-12	Initials: LAW	R-X
Full Path: www.coloradodot.info/business/designsupport		R-X
Drawing File Name: Sheet_S-614-40_3of5.dgn		R-X
CAD Ver.: MicroStation V8 Scale: Not to Scale Units: English		R-X

Sheet Revisions	
Date:	Comments

Colorado Department of Transportation
4201 East Arkansas Avenue
Denver, Colorado 80222
Phone: (303) 757-9543
Fax: (303) 757-9219
Safety & Traffic Engineering Branch KCM/RLO

TYPICAL TRAFFIC SIGNAL INSTALLATION DETAILS

Issued By: Safety & Traffic Engineering Branch July 4, 2012

STANDARD PLAN NO.
S-614-40
Sheet No. 3 of 5

The Town of ERIE COLORADO

DRAWING TITLE: MASTARM POLES (>55'&DOUBLES)
DRAWING NUMBER: TS-14C
DRAWN BY: W.L. APPROVED BY: G. BEHLEN DATE: 1/2015

MAST ARM LENGTH (FT.)	FACEPLATE DATA								STOP BAR DATA	SIDE PLATE DATA		WASHER DATA			U-BOLT DATA ●			
	FACEPLATE HEIGHTS			THICKNESS OF FACEPLATE	WIDTH OF FACEPLATE		RADIUS	EDGE DISTANCE	BAR LENGTH	THICKNESS OF SIDE PLATE	EAR HEIGHT	LENGTH OF WASHER	WIDTH OF WASHER	BOLT SPACING	DIAMETER OF U-BOLT	BEND RADIUS U-BOLT (A)	BEND RADIUS U-BOLT (B)	DIAMETER OF OVERSIZED HOLE
	TOP (H_{TOP}) (IN.)	BOTTOM (H_{BOTTOM}) (IN.)	TOTAL (H_{FACE})(IN.)	(T_{FACE}) (IN.)	ENDS (W_E) (IN.)	CENTER (W_C) (IN.)	(IN.)	(S_{EDGE}) (IN.)	(L_{BAR}) (IN.)	(T_{SP}) (IN.)	(H_{EAR}) (IN.)	(L_{WASHER}) (IN.)	(W_{WASHER}) (IN.)	(S_{BOLT}) (IN.)	(D_{U-BOLT}) (IN.)	(IN.)	(IN.)	(IN.)
30	17.72	15.09	32.81	1.500	14.73	20.00	52.40	2.125	18.000	0.875	1.000	7.000	3.00	4.000	0.875	5.09	5.23	1.188
40	18.47	15.72	34.19	1.750	17.74	23.00	56.85	2.125	19.000	1.000	1.125	7.000	3.00	4.000	1.125	6.58	6.73	1.438
50	20.78	17.78	38.56	2.125	20.89	24.00	120.22	2.125	23.000	1.000	1.375	7.000	3.00	4.000	1.250	8.13	8.31	1.563
65	24.91	20.91	45.81	2.375	25.67	29.00	158.58	2.563	28.000	1.125	1.500	8.500	3.50	5.000	1.375	10.05	10.26	1.688
75	26.59	22.59	49.19	2.500	28.07	31.00	207.07	2.563	31.000	1.125	1.625	8.500	3.50	5.000	1.500	11.23	11.46	1.813

MAST ARM LENGTH (FT.)	POLE DATA								SADDLE DATA
	BASE SECTION ✶				END SECTION WITH LUMINAIRE ◆				THICKNESS OF SADDLE PLATES
	LENGTH (FT.)	TOP ø (IN.)	BOTTOM ø (IN.)	THK. (IN.)	LENGTH (FT.)	TOP ø (IN.)	BOTTOM ø (IN.)	THK (IN.)	(T_{SA}) (IN.)
30	24.55	8.79	12.23	0.3125	15.57	7.25	9.43	0.2391	1.375
40	24.96	11.49	14.98	0.3125	15.51	10.00	12.17	0.2391	1.375
50	25.54	14.40	17.98	0.3125	15.30	13.00	15.14	0.2391	1.375
65	26.30	18.05	21.73	0.3125	14.99	16.75	18.85	0.2391	1.500
75	26.74	20.24	23.98	0.3125	14.83	19.00	21.07	0.2391	1.625

● BEND RADIUS MEASURED TO THE ℄ OF EACH U-BOLT. INCREASE RADII AS NEEDED TO ACCOMMODATE OUT-OF-ROUNDNESS, GALVANIZING THICKNESS AND SEAM WELD PROFILES. U-BOLTS SHALL BE TIGHTENED 1/12 TURN (30° ±5°) PAST SNUG TIGHT; PEEN THREADS AFTER TIGHTENING. U-BOLTS AND FACEPLATE SHALL BE MOUNTED ON BASE SECTION PRIOR TO SHIPMENT.

✚ MATCH FIT STOP BAR TO SIDE PLATE USING TACK WELDS TO ENSURE UNIFORM BEARING.

✶ BASE SECTION LENGTHS INCLUDE THE SPLICE LENGTH AS PER THE "MAST ARM SLIP SPLICE DETAIL" ON SHEET 2 OF 5.

◆ SEE GENERAL NOTE 31 ON SHEET 1 OF 5.

■ END ALL WELDS 1/2 IN. SHORT OF BOLT HOLE AND PLATE EDGES.

▼ BEND STOP BAR TO MATCH POLE CURVATURE.

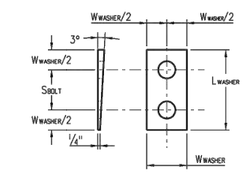

TAPERED WASHER DETAILS

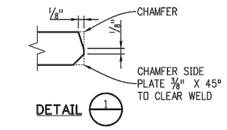

DETAIL 1

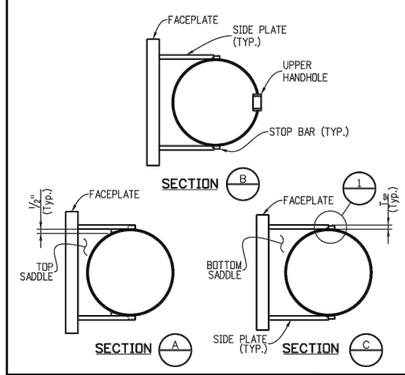

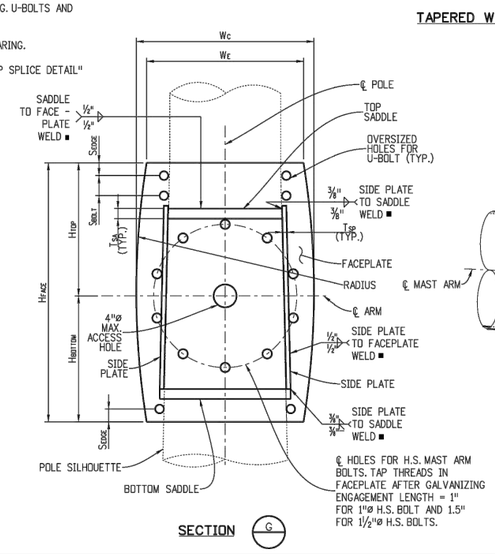

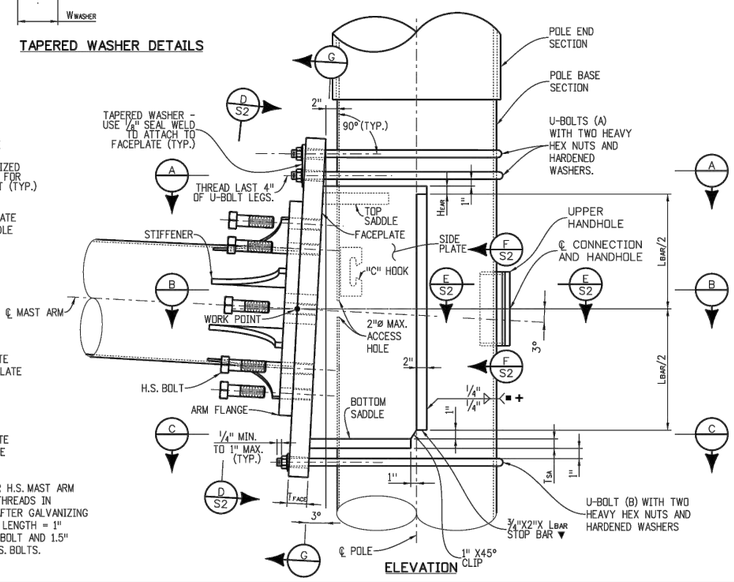

Computer File Information		Sheet Revisions	
Creation Date: 07-04-12 Initials: LAW		Date:	Comments
Last Modification Date: 07-04-12 Initials: LAW	R-X		
Full Path: www.coloradodot.info/business/designsupport	R-X		
Drawing File Name: Sheet_ S-614-40 4 OF5.dgn	R-X		
CAD Ver.: MicroStation V8 Scale: Not to Scale Units: English	R-X		

Colorado Department of Transportation
4201 East Arkansas Avenue
Denver, Colorado 80222
Phone: (303) 757-9543
Fax: (303) 757-9219
Safety & Traffic Engineering Branch KCM/RLO

TYPICAL TRAFFIC SIGNAL INSTALLATION DETAILS

Issued By: Safety & Traffic Engineering Branch July 4, 2012

STANDARD PLAN NO.
S-614-40
Sheet No. 4 of 5

The Town of ERIE COLORADO

DRAWING TITLE: MASTARM POLES (>55'&DOUBLES)

DRAWING NUMBER: TS-14D

DRAWN BY: W.L. APPROVED BY: G. BEHLEN DATE: 1/2015

MAST ARM LENGTH (FT.)	POLE BASE CONNECTION DATA																	CAISSON DATA (FOR SINGLE AND DOUBLE ARM INSTALLATIONS)				
	STIFFENER								BASE PLATE		ANCHOR BOLT										V BARS	
	NO. OF	THK. (IN.)	WIDTH (IN.)	HEIGHT (IN.)	RADIUS (IN.)	ANGLE	WALL WELD (IN.)	PLATE WELD (IN.)	DIA. (IN.)	THK. (IN.)	NO. OF	DIA. (IN.)	LENGTH (IN.)	CIRCLE DIA. (IN.)	HOLE DIA. (IN.)	ANGLE	PROJECTION (IN.)	DIA. (IN.)	DEPTH (D) (FT.)	PAY LENGTH (L) (FT.)	SIZE	TOTAL
30	6	0.75	5.0	10	10.600	30.0°	0.25	0.625	24	2.25	6	2.0	63	17.75	2.25	60.0°	11.25	36	12.5	13	#9	11
40	6	0.75	5.5	11	11.841	30.0°	0.25	0.625	27	2.50	6	2.0	63	21.00	2.25	60.0°	11.50	36	14.5	15	#9	11
50	6	0.75	6.5	13	14.327	30.0°	0.25	0.625	32	2.75	6	2.0	63	25.00	2.25	60.0°	11.75	42	16.5	17	#9	14
65	6	0.75	8.0	16	18.063	30.0°	0.25	0.625	39	3.00	6	2.5	63	30.25	2.75	60.0°	12.50	48	20.5	21	#9	18
75	6	0.75	8.5	17	19.309	30.0°	0.25	0.625	42	3.25	6	2.5	63	33.00	2.75	60.0°	12.75	54	20.5	21	#9	23

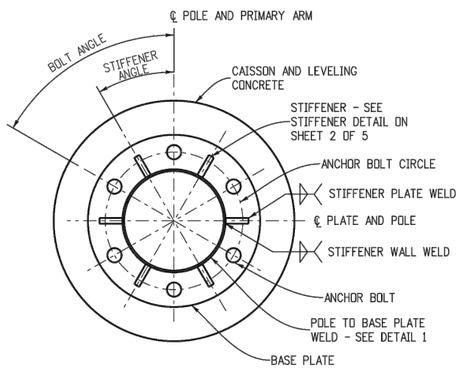

SECTION A

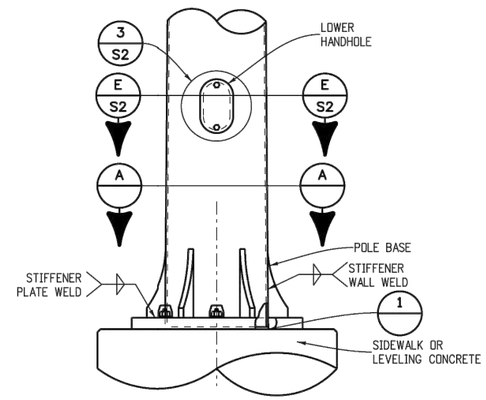

BASE PLATE DETAIL

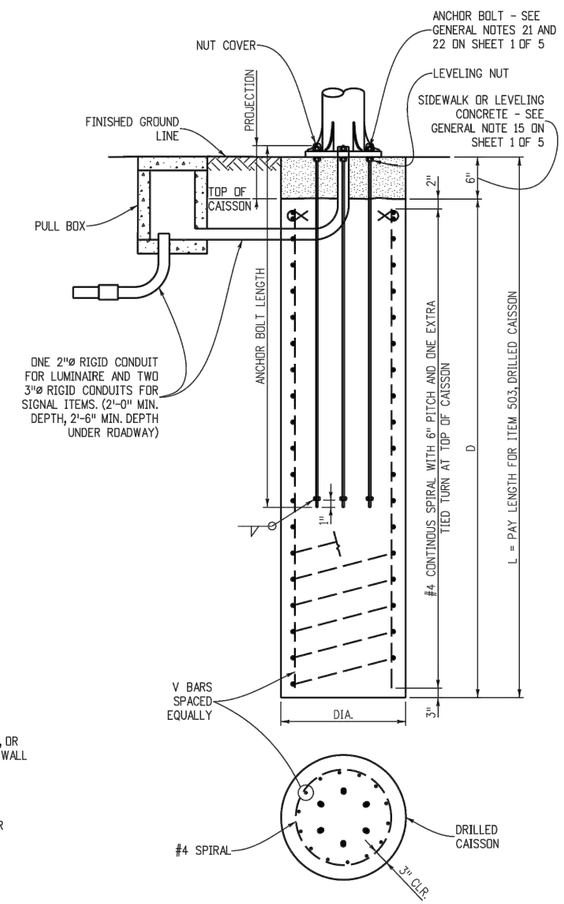

TRAFFIC SIGNAL POLE CAISSON

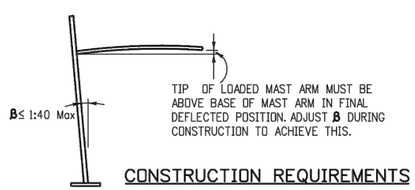

CONSTRUCTION REQUIREMENTS

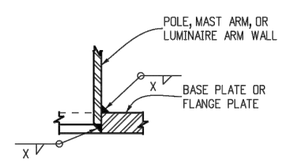

SOCKET WELD

X = 3/16" FOR LUMINAIRE ARMS AND 1/4" FOR POLES. SEE TABLE ON SHEET 2 OF 5 FOR MAST ARMS.

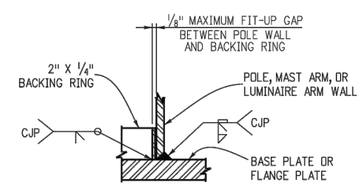

BACKING RING WELD

DETAIL 1 / 1 S2

Computer File Information		Sheet Revisions	
Creation Date: 07-04-12 Initials: LAW		Date:	Comments
Last Modification Date: 07-04-12 Initials: LAW	R-X		
Full Path: www.coloradodot.info/business/designsupport	R-X		
Drawing File Name: Sheet_S-614-40_5of5.dgn	R-X		
CAD Ver.: MicroStation V8 Scale: Not to Scale Units: English	R-X		

Colorado Department of Transportation
4201 East Arkansas Avenue
Denver, Colorado 80222
Phone: (303) 757-9543
Fax: (303) 757-9219
Safety & Traffic Engineering Branch KCM/RLO

TYPICAL TRAFFIC SIGNAL INSTALLATION DETAILS

Issued By: Safety & Traffic Engineering Branch July 4, 2012

STANDARD PLAN NO.
S-614-40
Sheet No. 5 of 5

The Town of ERIE COLORADO

DRAWING TITLE: MASTARM POLES (55'&DOUBLES)

DRAWING NUMBER: TS-14E

DRAWN BY: W.L. APPROVED BY: G. BEHLEN DATE: 1/2015