PROJECT IMPLEMENTATION REPORT FOR THE WASTEWATER RECLAMATION FACILITIES

Prepared for:

TOWN OF ERIE
1874

October 2014

Frachetti Engineering, Inc.
5325 S Valentia Way
Greenwood Village, CO 80111
ph: (303) 300-3464

PROJECT IMPLEMENTATION REPORT FOR THE WASTEWATER RECLAMATION FACILITIES

TOWN OF ERIE

ERIE, COLORADO

OCTOBER 2014

PN/FILE NO.: ERIE-13-0109

Prepared by:

Frachetti Engineering INC

5325 S Valentia Way
Greenwood Village, Colorado 80111
ph: (303) 300-3464
fax: (303) 300-3451

TABLE OF CONTENTS

1. EXECUTIVE SUMMARY 5

2. INTRODUCTION 7

3. BASIS OF PLANNING 8
   - 3.1. Historical Influent Characteristics 8
   - 3.2. Projected Influent characteristics 12
   - 3.3. Alum Sludge from Water Treatment Plant 14
   - 3.4. Other Considerations 15

4. COMPREHENSIVE PERFORMANCE EVALUATION 16
   - 4.1. North Water Reclamation Facility 16
     - 4.1.1. Headworks 16
     - 4.1.2. Anaerobic / Anoxic Tanks 17
     - 4.1.3. IFAS / Blowers 18
     - 4.1.4. Clarifier 20
     - 4.1.5. Solids Stabilization Process 21
     - 4.1.6. North Water Reclamation Facility Capacity Summary 23
   - 4.2. South Water Reclamation Facility 26

5. FACILITY OPTIMIZATION 27

6. ALTERNATIVES ANALYSIS 28
   - 6.1. SHORT TERM Alternatives 29
     - 6.1.1. Short Term – Alternative ST 1 – NWRF Shares Treatment with SWRF, Cake and Liquid Haul 30
     - 6.1.2. Short Term – Alternative ST 2 – NWRF Shares Treatment with SWRF, Liquid Haul Only 31
     - 6.1.3. Short Term – Alternative ST 3 – NWRF Treats All Influent, Liquid Haul Only 33
     - 6.1.4. Short Term – Alternative ST 4 – NWRF Treats All Influent, Liquid Haul and Cake Haul 34
   - 6.2. LONG TERM Alternatives 36
     - 6.2.1. Long Term – Alternative LT 1 – NWRF Shares Treatment with SWRF, Cake and Liquid Haul 36
     - 6.2.2. Long Term – Alternative LT 2 – NWRF Shares Treatment with SWRF, Liquid Haul Only 38
     - 6.2.3. Long Term – Alternative LT 3 – NWRF Treats All Influent, FKC Screw Press with Cake Haul 39
     - 6.2.4. Long Term – Alternative LT 4 – NWRF Treats All Influent, Aerobic Digestion Cake Haul 41
     - 6.2.5. Long Term – Alternative LT 5 – NWRF Treats All Influent, Liquid Haul Lime Sludge 42
     - 6.2.6. Long Term – Alternative LT 6 – NWRF Treats All Influent, Schwing Screw Press 44
     - 6.2.7. Long Term – Alternative LT 7 – SWRF Used As Influent Equalization 45
   - 6.3. Discussion on Alum Sludge 46

7. ALTERNATIVES SUMMARY 48

8. CAPITAL IMPROVEMENTS PLAN 50

9. FUNDING ANALYSIS 52

TABLE OF CONTENTS

9.1. Background Information 52
9.2. Funding Eligibility 52
9.3. Water Pollution Control Revolving Funds (WPCRF) 53
9.4. Energy and Mineral Impact Assistance Funds (EMI) 55

10. WATER TREATMENT PLANT PILOT STUDY 56

11. NWRF PILOT STUDY 57

12. RECOMMENDED PROJECT 59

Tables

Table 1. Capital Improvements Summary 6
Table 2. Monthly Average Influent Flow, MGD 9
Table 3. Monthly Average Influent BOD, mg/l 9
Table 4. Monthly Average Influent BOD, ppd 10
Table 5. Monthly Average Influent Ammonia, mg/l 11
Table 6. Monthly Average Influent Ammonia, ppd 11
Table 7. Projected Flow and Loading 12
Table 8. Projected Flow and Load Summary 13
Table 9. Daily Alum Sludge Production at Town of Erie WTP 14
Table 10. Town of Erie Water Demand 15
Table 11. Headworks Equipment Capacity 17
Table 12. Anaerobic / Anoxic Tank Capacity 17
Table 13. Comparison of Influent Design Criteria and Recent Max Month Influent Data 18
Table 14. Aeration Requirements for IFAS 19
Table 15. Secondary Clarifier Process Capacity Summary 21
Table 16. WAS Production 22
Table 17. Solids Stabilization System Capacity 23
Table 18. North Water Reclamation Facility Unit Process Capacity 24
Table 19. Short Term Alternatives (2015-2023) 29
Table 20. Long Term Alternatives (2024-2029) 29
Table 21. Alternative ST 1 – Influent and Sludge Loading 30
Table 22. Alternative ST 1 – Net Present Worth 31
Table 23. Alternative ST 1 - Advantages and Disadvantages 31
Table 24. Alternative ST 2 – Influent and Sludge Loading 32
Table 25. Alternative ST 2 – Net Present Worth 33
Table 26. Alternative ST 2 - Advantages and Disadvantages 33
Table 27. Alternative ST 3 – Influent and Sludge Loading 33
Table 28. Alternative ST 3 – Net Present Worth 34
Table 29. Alternative ST 3 - Advantages and Disadvantages 34
Table 30. Alternative ST 4 – Influent and Sludge Loading 35
Table 31. Alternative ST 4 – Net Present Worth 36
Table 32. Alternative ST 4 - Advantages and Disadvantages 36
Table 33. Alternative LT 1 – Influent and Sludge Loading 36
Table 34. Alternative LT 1 – Net Present Worth 37
Table 35. Alternative LT 1 - Advantages and Disadvantages 38
Table 36. Alternative LT 2 – Influent and Sludge Loading 38

TABLE OF CONTENTS

Table 37. Alternative LT 2 – Net Present Worth 39
Table 38. Alternative LT 2 - Advantages and Disadvantages 39
Table 39. Alternative LT 3 – Influent and Sludge Loading 40
Table 40. Alternative LT 3 – Net Present Worth 40
Table 41. Alternative ST 3 - Advantages and Disadvantages 41
Table 42. Alternative LT 4 – Influent and Sludge Loading 41
Table 43. Alternative LT 4 – Net Present Worth 42
Table 44. Alternative ST 4 - Advantages and Disadvantages 42
Table 45. Alternative LT 5 – Influent and Sludge Loading 43
Table 46. Alternative LT 5 – Net Present Worth 43
Table 47. Alternative ST 5 - Advantages and Disadvantages 44
Table 48. Alternative LT 6 – Influent and Sludge Loading 44
Table 49. Alternative LT 6 – Net Present Worth 45
Table 50. Alternative ST 6 - Advantages and Disadvantages 45
Table 51. Alternative LT 7 – Net Present Worth 46
Table 52. Alternative ST 7 - Advantages and Disadvantages 46
Table 53. NWRF Hauling Costs 46
Table 54. NWRF Chemical Costs 47
Table 55. Alternative Summary 48
Table 56. Alternative Combination Cost Summary 49
Table 57. Capital Improvements Schedule 51

Figures

Figure 1. Historical Max Month BOD Loading 10
Figure 2. WTP Alum Sludge Production 15
Figure 3. Ammonia Profile Over Week Period (January 28th through February 3rd, 2014) 20
Figure 4. North Water Reclamation Facility Unit Capacity Summary 25
Figure 5. Screw Press Screen Corrosion 57
Figure 6. Screw Press Screen Failure 58

Appendices

A. Summary of Process Data from 2012 and 2013
B. Kruger model results and email
C. K-Turbo blower curve
D. Anaerobic / Anoxic Calculations
E. Clarifier Calculations
F. FKC Notes from Sludge Lab Testing
G. Generator Sizing without blower
H. Generator Sizing with blower
I. Blower Capacity Calculations
J. Biosolids Calculations
K. Short Term Alternatives Calculations
L. Long Term Alternatives Calculations
M. Equipment Proposals
    a. M.1 – Hydro Grit System
    b. M.2 – JWC Band Screen
    c. M.3 – Flygt Pumps

TABLE OF CONTENTS

d. M.4 – Wilo Mixers
e. M.5 – WTW Nitrate and Ammonia Probes
f. M.6 – Seepex Progressing Cavity Pumps
g. M.7 – Gorman Rupp Pumps
h. M.8 – Aerzen Blowers
i. M.9 – Schwing Bioset
j. M.10 – Kruger IFAS for NWRF
k. M.11 – Kruger IFAS for SWRF
l. M.12 – FKC Screw Press and RDT

N. Biowin Model Output for SWRF
O. Data provided by Town of Erie
P. Aerobic Digestion Figure
Q. Calculations Showing Effect of Alum Sludge

1. EXECUTIVE SUMMARY

The Town of Erie decommissioned the South Water Reclamation Facility (SWRF) in 2011 after the North Water Reclamation Facility (NWRF) was constructed and became operational. Since the startup of the NWRF, average annual influent BOD_5 loading concentration has increased and there are months during the year when the influent BOD_5 loading approaches or exceeds the NWRF's permitted organic load capacity of 3223 lbs BOD_5/day. This issue has prompted the Town to consider options for increasing the wastewater treatment capacity at one or both treatment facilities. The Town has also requested that Frachetti Engineering, Inc. (FEI) evaluate alternate facility upgrade options to provide reliable and compliant wastewater treatment capacity to prepare for future Town population growth.

In addition to increased influent organic loads approaching rated capacity, the NWRF solids stream process has required above normal polymer usage, lime usage, and operator intervention associated with dewatering system instability. During the development of this report, the Town contracted with Dave Sanders, who is a regional expert in water treatment chemistry, to investigate the cause of the unusually high polymer and lime usage. His investigation identified that alum sludge from the water treatment plant discharged to the sewer system was found to be the major cause of the high chemical usage and unstable dewatering process performance.

This report thus evaluates alternatives for improving the SWRF and NWRF (in various combinations) to provide a short term capacity (1.99MGD and 5372 lbs BOD/day), and long term capacity of 2.5MGD and 6798 lbs BOD/day. The short term capacity basis was selected to be just under a rated capacity of 2 MGD to allow for deferral of Regulation 85 nutrient limits until 2022. The long term capacity was selected based on the maximum treatment capacity potential of the NWRF secondary treatment process at the observed higher influent BOD_5 concentrations. For all future treatment facility improvements, the Town has set an effluent treatment goal for total inorganic nitrogen (TIN) to less than 10 mg/l and effluent phosphorous to less than 1 mg/l.

Based on population growth projections adopted in the Town of Erie Comprehensive Plan, the short term improvements will provide treatment capacity until year 2023, and the long term improvements will provide treatment capacity until year 2029. After 2029, the NWRF will require major upgrades to the headworks, secondary treatment process, solids stream process, and disinfection process to provide the anticipated capacity needs.

A Comprehensive Performance Evaluation (CPE) was developed for the NWRF to identify capacity and performance limiting unit processes and equipment from both a hydraulic and organic treatment capacity. The processes requiring improvements include the headworks influent pumps (1.52MGD), influent grit removal system (1.71 MGD), blowers (1.5 MGD), secondary treatment integrated fixed film activated sludge (IFAS) process (1.17 MGD), and the solids stabilization and dewatering process (1.3 MGD). A CPE for the SWRF was previously developed in the most recent Wastewater Utility Plan by the Indigo Group. Both CPE's were used in the assessment and development of facility improvement alternatives.

Facility improvement alternatives were developed for both the NWRF and SWRF to increase the total wastewater treatment capacity. Cost and non-cost criteria were developed for each alternative and reviewed by the Town. The selected alternative is to improve the NWRF in the short term to treat the higher influent BOD loading and regain capacity. The short term improvements will set up the NWRF to have minimal long term improvements and place the Town on the best course for capital improvements of the facilities. The SWRF will remain decommissioned with the possibility for future re-commissioning or re-purposing. This will allow the Town to operate only one facility and focus all future planning on the NWRF.

The costs budgeted for improving the NWRF were arranged in a Capital Improvements Plan (CIP) to be used in the Town's CIP. These costs are summarized in Table 1.

Table 1. Capital Improvements Summary

Project	Year 2015	Year 2016	Years 2017-2020	Year 2021	Year 2022	Year 2023
NWRF – Short Term	Design/Const $1,120K	Design/Const $1,026K	--	--	--	--
NWRF – Long Term	--	--	--	Design $210K	Const $942K	Const $942K
Total	$1,120K	$1,026K	0	$210K	$942K	$942K

As a part of the investigation of the NWRF, the Town decided to undergo an investigation of the effects of the water treatment plant (WTP) alum sludge on the NWRF treatment process. For many years the WTP has discharged all alum sludge to the sanitary sewer for treatment at the wastewater treatment facility. The effects of the alum sludge were not noted when the SWRF was in operation, since aerobic digestion was used for solids stabilization and liquid sludge was hauled offsite. Since the NWRF has been in use, operations staff have noted the negative effects of the alum sludge on the lime stabilization process and dewatering of the residual biosolids. The presence of the alum in the biosolids creates an unstable solids treatment process and the requirement for excessive lime and polymer use which has accounted for a large portion of the annual NWRF operations budget.

During the summer and fall of 2014, the Town conducted a pilot study at the water treatment plant to identify what measures could be implemented to mitigate the negative impact the water plant sludge had on the NWRF solids treatment process. For two weeks during September, Poly Aluminum Chloride (PAC) was used as a coagulant substitution instead of Alum. This change resulted in some improvement to the stability of the NWRF dewatering process; and specifically decreased the lime required.

During the summer of 2014, the Town also conducted bench scale testing and full scale testing at the NWRF to determine what measures could be taken to improve the sludge dewatering process until the Alum sludge is removed from the waste stream. Sodium Hydroxide was substituted for some of the lime and sulfuric acid was used to lower the pH of the sludge prior to dewatering. The results showed little improvement with the Sodium Hydroxide addition but great improvements with the sulfuric acid addition. By lowering the pH to 9.5, the polymer use was reduced by approximately 35% and the lime scaling in the press and pipes was also reduced.

2. INTRODUCTION

The Town of Erie owns two wastewater treatment facilities: the South Water Reclamation Facility (SWRF) and the North Water Reclamation Facility (NWRF), and currently operates only the newer NWRF. The SWRF was decommissioned in 2011 when the NWRF was constructed and became operational. The NWRF is an Integrated Fixed-Film Activated Sludge (IFAS) facility designed with biological nutrient removal capability. This facility was constructed to replace the older SWRF which was not designed with nutrient removal capability. This report provides the Town with information to decide which of the two or both facilities should remain operational in the future. The timing of this decision is important as the Town desires to be proactive and make the best decision in preparing to meet the upcoming Regulation 85 nutrient limits while providing sufficient capacity to treat influent loading from the increasing town population. This report combines the previously written Facility Evaluation Memorandum and Alternatives Evaluation Memorandum along with a Capital Improvements Plan (CIP) and funding analysis.

Since the startup of the NWRF, average annual influent BOD loading has increased. There are months during the year when the loading approaches or exceeds the facility's permitted BOD capacity. This issue has caused the Town to look at options for increasing the wastewater treatment capacity at one or both treatment facilities. In the recent Wastewater Utility Plan (WUP) update by Indigo Water Group, alternatives were evaluated to improve the SWRF and remove nutrients so the SWRF could provide the town with additional treatment capacity. The WUP assumed the SWRF would be upgraded to remove nutrients and remain online at the current capacity (1.5 mgd) until Town buildout. The NWRF would continue to expand as required to provide the balance of the wastewater treatment capacity necessary for Town growth. Although this approach is valid, there are concerns with the burden of operating two treatment facilities with separate permitted discharges. The Town would like to carefully make decisions that can be integrated into a long term facility upgrade plan.

In addition to the BOD capacity concerns, the Town of Erie water treatment plant (WTP) has been discharging all alum sludge to the NWRF for treatment which has caused issues with the biosolids stabilization process. The alum sludge has caused unstable operation of the screw press and requires the use more chemicals than originally designed. An alum sludge screw press pilot test will be conducted during the summer of 2014 which will allow the entire alum sludge waste stream from being diverted to the NWRF and identify the true negative effects of the alum sludge on the biosolids stabilization process. The results of this pilot study will be summarized in this report along with a Capital Improvements Plan (CIP) to identify the costs expended for facility improvements on a year by year basis.

3. BASIS OF PLANNING

The updated WUP provides a thorough analysis of historical influent characteristics as well as projected growth and future planning conditions. This information has been evaluated in regards to the Towns goals and key tables have been duplicated in this memorandum with additions and/or modifications. For the purpose of this memorandum, short term and long term treatment goals are established to provide direction for developing capital improvements plan alternatives. The short-term projection (2023) will have a corresponding max month flow of 1.99 MGD and loading generation of 5372 ppd BOD and 596 ppd NH_3. The long term projection (2029) will have a corresponding max month flow of 2.5 MGD and loading generation of 6798 ppd BOD and 754 ppd NH_3.

3.1. HISTORICAL INFLUENT CHARACTERISTICS

The Town of Erie provided FEI with process, flow, and loading data for the past two years (a summary is included in Appendix A for reference). In order to provide a complete historical influent flow and loading perspective, this data was compiled and added to the Influent Characteristics Tables provided in the updated WUP. Tables 2 through 6 provide the updated Town of Erie historical wastewater flow and loading values. Items to note in the Influent Characteristic Tables include the following:

- Influent wastewater composite sampling occurs downstream of the point where filtrate from the solids treatment process is returned and mixed with the influent wastewater.
- Max month flows typically occur in June/July whereas max month BOD loading occurs between November and February. Recent Max Month influent BOD concentrations have been 340 mg/l as opposed to the process design value of 258 mg/l. The process design values use max month flow data (summer time including I&I) with the typical summertime BOD concentrations (typically 250 to 280 mg/l) in order to calculate a BOD loading for the facility. However, this produces a total pounds BOD loading less than the loading that occurs between November and February (the colder months of the year). Figure 1 below demonstrates the BOD loading has been above the 80% NWRF capacity threshold since 2007.
- Recent Max Month influent ammonia concentrations have been 41 mg/l (TKN= 1.67 * 41 mg/l = 68 mg/l) as opposed to the TKN process design value of 25 mg/l (ammonia concentrations of 15 mg/l). Thus the actual ammonia concentration is approximately 2.7 times the design value.
- Recently the Town took point samples upstream and downstream of the point of filtrate discharge into influent. The results indicated BOD concentration increased 20 mg/l due to solids stream filtrate.

Table 2. Monthly Average Influent Flow, MGD

	2003	2004	2005	2006	2007	2008	2009	2010	2012[1]	2013
January	0.48	0.54	0.77	0.78	0.94	0.91	0.91	0.98	1.07	1.07
February	0.49	0.55	0.78	0.78	0.98	0.91	0.92	0.96	1.01	1.09
March	0.56	0.63	0.78	0.77	0.97	0.89	0.93	0.97	1.04	1.11
April	0.54	0.64	0.83	0.77	1.04	0.89	0.98	1.02	1.07	1.17
May	0.6	0.67	0.79	0.82	0.98	0.96	0.98	1.04	1.14	1.18
June	0.58	0.74	0.77	0.91	0.92	0.95	1.04	1.09	1.13	1.24
July	0.6	0.78	0.75	0.9	0.93	0.98	1.02	1.04	1.16	1.14
August	0.64	0.8	0.79	0.87	0.91	0.96	0.99	1.02	1.05	1.12
September	0.65	0.81	0.77	0.87	0.97	0.94	0.95	1.01	1.08	1.51[3]
October	0.62	0.78	0.82	0.88	0.87	0.91	0.96	0.98	1.08	1.15
November	0.61	0.76	0.77	0.88	0.88	0.91	1.03	0.99	1.05	1.15
December	0.56	0.77	0.8	0.87	0.91	0.93	1.06	0.97	1.06	1.13
Average	0.58	0.71	0.78	0.84	0.94	0.93	0.98	1.01	1.08	1.17
MM	0.65	0.81	0.83	0.91	1.04	0.98	1.06	1.09	1.16	1.51
PF	1.13	1.14	1.05	1.08	1.1	1.05	1.09	1.08	1.07	1.29

(1) No data provided for 2011
(2) Data from table above derived from Table 4-7 from Indigo WUP and Town of Erie records
(3) High flows occurred during flooding event in September 2013
(4) Shaded values represent flow to NWRF which include side stream flow and loading

Table 3. Monthly Average Influent BOD, mg/l

	2003	2004	2005	2006	2007	2008	2009	2010	2012[1]	2013
January	277	314	269	331	316	373	303	264	283	359
February	296	351	247	315	258	402	340	247	283	333
March	271	291	282	327	262	317	344	265	291	300
April	282	278	273	325	237	322	337	270	283	292
May	307	300	270	268	247	301	288	272	255	278
June	285	260	269	315	264	265	283	227	252	268
July	265	241	295	306	289	269	284	227	290	250
August	210	228	298	306	277	262	298	206	314	251
September	245	222	288	284	262	272	285	247	290	247
October	238	223	296	266	291	278	332	329	279	295
November	240	223	339	287	308	330	297	274	286	319
December	296	253	319	282	384	331	296	377	318	321
Average	268	265	287	301	283	310	307	265	285	293
Max Month	307	351	339	331	384	402	344	377	318	359

(1) No data provided for 2011
(2) Data from table above derived from Table 4-13 from Indigo WUP and Town of Erie records.

Table 4. Monthly Average Influent BOD, ppd

	2003	2004	2005	2006	2007	2008	2009	2010	2012[1]	2013
January	1,076	1,417	1,725	2,142	2,476	2,708	2,210	2,029	2,468	3,139
February	1,207	1,589	1,597	2,037	2,110	2,849	2,427	1,880	2,316	2,927
March	1,246	1,531	1,838	2,100	2,120	2,286	2,474	2,215	2,441	2,622
April	1,282	1,470	1,880	2,091	2,044	2,344	2,537	2,138	2,434	2,770
May	1,543	1,682	1,758	1,817	2,005	2,325	2,257	2,256	2,360	2,728
June	1,387	1,612	1,736	2,381	2,021	2,057	2,390	1,981	2,381	2,725
July	1,330	1,561	1,852	2,301	2,245	2,150	2,386	1,921	2,719	2,367
August	1,127	1,529	1,954	2,209	2,027	2,028	2,400	1,743	2,722	2,304
September	1,329	1,490	1,860	2,054	2,005	2,041	2,273	1,963	2,561	2,681
October	1,239	1,454	2,014	1,967	2,005	2,008	2,658	2,565	2,428	2,777
November	1,225	1,413	2,178	2,107	2,135	2,394	2,272	2,158	2,426	3,004
December	1,367	1,619	2,127	2,052	2,817	2,492	2,378	2,960	2,706	2,995
Average	1,280	1,530	1,877	2,105	2,168	2,307	2,389	2,141	2,497	2,753
MM	1,543	1,682	2,178	2,381	2,817	2,849	2,658	2,960	2,722	3,139
PF	1.21	1.1	1.16	1.13	1.3	1.24	1.11	1.38	1.09	1.14

(1) No data provided for 2011
(2) Data from table above derived from Table 4-14 from Indigo WUP and Town of Erie records.
(3) Cells highlighted show month with maximum BOD loading in a given year

Figure 1. Historical Max Month BOD Loading

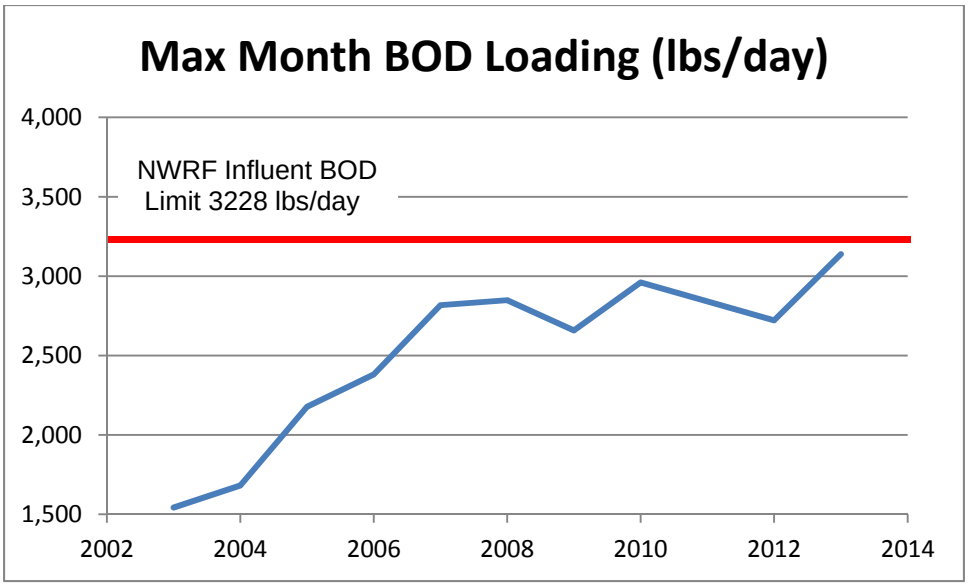

Table 5. Monthly Average Influent Ammonia, mg/l

	2003	2004	2005	2006	2007	2008	2009	2010	2012[1]	2013
January	31	39	27	31	38	41	42	40	32	33
February	33	39	29	31	31	31	42	43	31	33
March	35	34	30	37	33	40	44	40	36	33
April	31	32	29	36	35	38	39	38	34	31
May	30	34	26	30	32	35	46	45	35	36
June	30	27	28	30	32	37	38	47	33	33
July	29	30	29	34	37	34	38	41	33	36
August	31	35	31	30	34	38	41	40	36	42
September	29	27	35	33	32	41	37	44	36	35
October	28	26	33	34	37	42	38	43	38	37
November	29	28	36	35	34	44	40	42	40	40
December	38	29	33	35	35	41	45	42	37	39
Average	31	32	31	33	34	38	41	42	35	36
Max Month	38	39	36	37	38	44	46	47	40	42

(1) No data provided for 2011
(2) Data from table above derived from Table 4-17 from Indigo WUP and Town of Erie records.

Table 6. Monthly Average Influent Ammonia, ppd

	2003	2004	2005	2006	2007	2008	2009	2010	2012[1]	2013
January	123	175	173	198	294	300	305	311	283	290
February	133	175	187	197	250	218	301	324	255	292
March	159	178	196	238	268	285	313	321	306	290
April	139	167	202	233	303	273	296	303	291	294
May	151	189	171	201	262	272	359	376	328	351
June	144	167	177	228	247	286	322	412	315	334
July	143	192	181	253	285	268	319	345	312	341
August	164	232	203	218	250	292	328	338	313	381
September	157	180	228	238	245	304	290	352	322	377
October	143	171	222	246	253	300	307	334	328	349
November	148	179	229	261	235	321	303	334	337	375
December	178	184	222	251	255	303	358	260	308	367
Average	149	182	199	230	262	285	317	334	308	337
MM	178	232	229	261	303	321	359	412	337	381
PF	1.2	1.27	1.15	1.13	1.16	1.13	1.13	1.23	1.09	1.13

(1) No data provided for 2011
(2) Data from table above derived from Table 4-18 from Indigo WUP and Town of Erie records.

3.2. PROJECTED INFLUENT CHARACTERISTICS

The data for the projected influent characteristics shown in the updated WUP tables 4-24 and 4-26 is considered too conservative for this study as the flow and loading per capita values used are higher than recent flow and loading generation rates. For this study, historical influent data along with the project population growth rate described in the WUP is used to develop projected flow and loadings which are summarized in Table 7. Table 8 summarizes the short and long-term projected wastewater flow and loading rates.

Table 7. Projected Flow and Loading

	MMDF (MGD)	MMBOD (ppd)[6]	$MMNH_3$ (ppd)[7]	Population Growth[4]
2010[1]	**1.09**	**2960**	**412**	
2012[1]	**1.16**	**2722**	**337**	**3.16%**
2013[1]	**1.24**	**3139**	**381**	**6.90%**
2014	1.31	3565	395	6%
2015	1.39	3779	419	6%
2016	1.48	4005	444	6%
2017	1.57	4246	471	6%
2018	1.63	4416	490	4%
2019	1.69	4592	509	4%
2020	1.76	4776	530	4%
2021	1.83	4967	551	4%
2022	1.90	5166	573	4%
2023[2]	1.98	5372	596	4%
2024	2.06	5587	620	4%
2025	2.14	5811	645	4%
2026	2.23	6043	670	4%
2027	2.32	6285	697	4%
2028	2.41	6536	725	4%
2029[3]	2.51	6798	754	4%
2030	2.61	7069	784	4%
2031	2.71	7352	816	4%
2032	2.82	7646	848	4%
2033	2.93	7952	882	4%
2034	3.05	8270	917	4%
2035	3.17	8601	954	4%
2036	3.30	8945	992	4%
2037	3.43	9303	1032	4%
2038	3.57	9675	1073	4%
2039	3.71	10062	1116	4%
2040	3.86	10465	1161	4%
2041	4.01	10883	1207	4%
2042	4.17	11318	1255	4%
2043	4.34	11771	1306	4%

	MMDF (MGD)	MMBOD (ppd)[6]	MMNH$_3$ (ppd)[7]	Population Growth[4]
2044	4.51	12242	1358	4%
2045	4.69	12732	1412	4%
2046	4.88	13241	1469	4%
2047	5.08	13771	1527	4%
2048	5.28	14321	1589	4%
2049[5]	5.49	14894	1652	4%
2050	5.71	15490	1718	4%

(1) Historical data for reference
(2) Selected Short Term flow and loading based on paper rerating to 1.99MGD to keep Reg 85 10 year deferral to 2022
(3) Selected Long Term flow and loading based on existing secondary treatment process at NWRF
(4) Population growth estimate derived from Indigo WUP page 4-6 which states 6% growth rate until 2017 and 4% growth rate per year until buildout.
(5) Buildout calculated by 68,820 persons * 80 gpcd flow = 5.49MGD
(6) Assume MM influent BOD concentration of 325 mg/l
(7) Assume MM influent NH3 concentration of 36 mg/l (60 mg/l TKN)

Table 8. Projected Flow and Load Summary

Parameter	Short Term	Long Term	Buildout
Projected Year	2023	2029	2049
Annual Average Flow Generation Rate, (gpcd)	70	70	70
Maximum Month Flow Generation Rate, (gpcd)	80	80	80
Annual Average Daily Flow, (mgd)	1.73	2.19	4.81
Maximum Month Flow, (mgd)	1.99	2.5	5.49
Peak Hour Peaking Factor[1]	*3.33*	*3.20*	*2.81*
Peak Hour Flow, (mgd)	5.77	7.02	13.5
Max Month BOD, (ppd)[7]	5,372	6,798	14,894
Max Month NH$_3$, (ppd)[7]	596	754	1,652
WAS Production with alum sludge, (ppd)[5]	7,520	--	--
WAS Production without alum sludge (ppd)[6]	6,016	7,614	16,681

(1) Peak hour factor derived from DRCOG equation PF=3.65/(Q_{ave})^0.167
(2) Projected data based on paper rerating to 1.99MGD to keep Reg 85 10 year deferral to 2022
(3) Max capacity of existing secondary treatment process at NWRF
(4) Projected flows rates derived from Table 4-26 in Indigo WUP
(5) Assume a BOD to WAS TSS yield of 1.4 based on historical yield with alum sludge from WTP. As potable water demand increases, the yield would likely increase due to disproportionate WTP sludge production compared to WW influent flows. Assume WTP sludge will not be discharged to NWRF in long term
(6) Assume a BOD to WAS TSS yield of 1.12 based on NWRF design criteria (Max Month 3632 ppd WAS production from 3228 ppd BOD) which assumed no alum sludge from WTP.
(7) Assume influent BOD loading is 325 mg/l and influent ammonia is 36 mg/l (60mg/l TKN)

The effluent treatment goals set for future facility improvement projects include Total Inorganic Nitrogen (TIN) of less than 10mg/l and Total Phosphorous less than 1 mg/l. Historical effluent phosphorous from the NWRF has been low due to chemical precipitation of phosphorous with alum sludge from the Erie Water Treatment Facility. However, the Town has mentioned the upcoming WTP improvements may include work to handle the alum sludge at the water plant

and cease sending the sludge to the NWRF. This change will likely require the NWRF to begin adding chemicals (ferric chloride, alum, etc.) to decrease the effluent phosphorous concentration to below the treatment goal of 1 mg/l.

3.3. ALUM SLUDGE FROM WATER TREATMENT PLANT

The Town of Erie water treatment plant (WTP) uses alum for the coagulant and discharges all sludge to the WRF for treatment. Based on information from the WTP staff, alum sludge is discharged 4 times a day when the track-vac operates to remove sludge from the settling tank. The sludge is not metered at a constant rate to the WRF and there are no provisions to do so. Table 9 provides a summary of the daily sludge volumes discharged to the WRF.

Table 9. Daily Alum Sludge Production at Town of Erie WTP

	Average Day				Max Day
	Finished Water	Alum[1]		Waste to WRF	Finished Water
	MGD	ppd	mg/l	MGD	MGD
January	1.2	189	20	0.017	1.9
February	1.2	190	21	0.019	1.8
March	1.1	167	22	0.023	1.3
April	1.2	180	23	0.036	1.9
May	2.9	498	24	0.018	5.2
June	5.6	1126	24	0.052	7.1
July	5.9	1407	29	0.037	7.1
August	5.0	1269	31	0.035	6.1
September	2.9	667	27	0.036	5.9
October	1.6	314	24	0.027	2.1
November	1.4	319	28	0.026	1.6
December	1.3	290	26	0.026	1.7
Average	2.6	551	25	0.029	3.6

(1) Alum dose used at WTP.
(2) TSS concentration of Alum sludge was found to be 1.25% and 58% volatile.

Figure 2 shows the relationship between the alum use and waste sludge sent to the WRF. There appears to be some correlation between the alum use and the daily volume of sludge discharged as both increase during the summer months. However, the WTP staff does not routinely sample the alum sludge; therefore, the concentration of waste sludge throughout the year is unknown.

Figure 2. WTP Alum Sludge Production

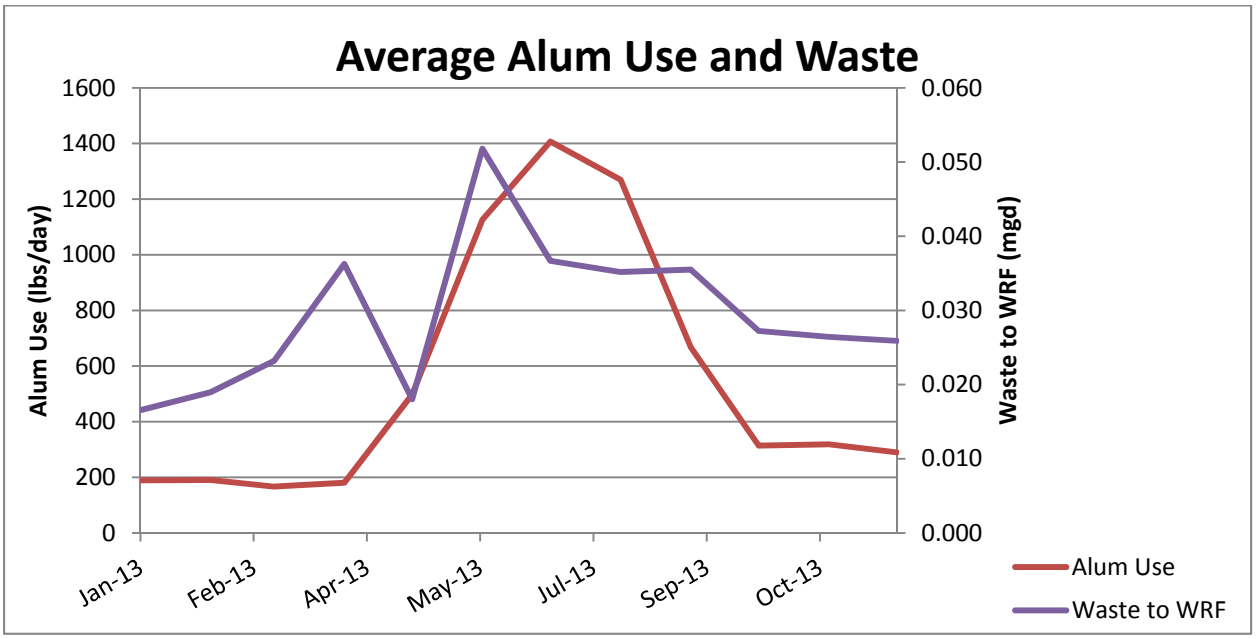

The Town of Erie potable water demand is projected to increase at a faster rate than the projected influent wastewater flow and therefore the alum sludge will likely overwhelm the WRF at some point if the Town does not provide alternate means of handling the sludge. Table 10 presents a summary and comparison of the projected water demand and influent wastewater production.

Table 10. Town of Erie Water Demand

Year	Annual Average Water Demand	Max Day Water Demand	Annual Average WW Influent
	MGD	MGD	MGD
2013	2.94	7.16	1.17
2025	10.2	26.6	3.7
Buildout	15	39.2	6.26

3.4. OTHER CONSIDERATIONS

The Town has also identified the desire to coordinate future WRF and WTP expansions/modifications to maximize the benefit of future investments. Some of the considerations identified include the following:

- Coordinate from what point the alum sludge is ultimately disposed. Identify short and long term solutions with the WTP sludge.
- Understand validity of using the SWRF to treat wastewater in the short and long term.
- Seek a sustainable method of wastewater sludge disposal/reuse.
- Utilize existing infrastructure when it provides a viable short or long-term benefit.

4. COMPREHENSIVE PERFORMANCE EVALUATION

The purpose of comprehensive performance evaluations is to estimate the potential hydraulic and organic treatment capacities of treatment facilities based upon present influent characteristics, identify process and equipment deficiencies/ limitations, and assess performance capabilities. The CPE process is also a valuable tool for defining the extent of facility modifications, expansion requirements, and/or improvements that may be required to meet future treatment objectives and facility effluent limits.

FEI evaluated the NWRF and SWRF treatment processes using information from the following sources:

- Site investigation and interviews with plant operations staff
- Review of record drawings
- Review of historical treatment facility process data
- Review of Updated WUP by Indigo Water Group
- Conversations with equipment manufacturers and updated design criteria

The Updated WUP by Indigo Water Group provided a thorough evaluation of all processes in the NWRF and SWRF. In order to efficiently utilize previous work, FEI reviewed the work by Indigo and identified the following processes that require additional attention:

- North Water Reclamation Facility
  - Headworks
  - Anaerobic / Anoxic Tanks
  - IFAS / Blowers
  - Secondary Clarifiers
  - Solids Stabilization Process
- South Water Reclamation Facility
  - No Processes Require Additional Attention

4.1. NORTH WATER RECLAMATION FACILITY

4.1.1. Headworks

The WUP provided a discussion of the NWRF headworks along with a table presenting a summary of the equipment and process capacities. FEI worked with the mechanical screen, grit system, and influent pump manufacturer to confirm the capacities. Table 11 presents a summary of the capacity of the headworks equipment.

Table 11. Headworks Equipment Capacity

Equipment	Peak Hour Capacity (MGD)
Mechanical Screen	12
Grit System	4.2
Influent Pumps	4.6

During the CPE site visit, operations staff noted the influent screen has had many issues and service calls since start up. The channel configuration was designed around the JWC band screen and may not accommodate any different style screen. The space allotted for a future screen will also be fitted with a JWC band screen style.

Operations staff have also noted issues with grit accumulating in the influent lift station. A permanent solution will be required to maintain grit in suspension in the lift station so it can be pumped to the grit chamber.

FEI also noted there is not a redundant grit pump which the Town may want to consider. Spare parts kept onsite may be a viable alternative to having an installed standby pump.

4.1.2. Anaerobic / Anoxic Tanks

The evaluation of the anaerobic and anoxic tanks in the WUP did not include reference to sludge residence time (SRT) in the tanks. These tanks should be sized such that the SRT is between 1-2 days in the anaerobic tank and between 1-1.5 days in the anoxic tank under max month flow conditions. Table 12 presents the hydraulic capacity of the anaerobic selector and the anoxic tank based on the minimum SRT required.

Table 12. Anaerobic / Anoxic Tank Capacity

Parameter	Anaerobic Selector[1]	Anoxic Tank[1]
Volume (gal)	157,650	221,920
SRT Required (days)[2]	1-2	1-1.5
Calculated HRT (hrs)[3]	1.2	0.4
Capacity (mgd)[1]	1.7	2.4

(1) Assumes max month influent BOD concentration of 330 mg/l, BOD sludge yield of 1.0, RAS flow 0.75 Q, RAS concentration of 8000 mg/l, 1 day SRT.
(2) These SRT values are recommended for biological phosphorous removal. If alum sludge from the WTP is sent to the WRF, the alum sludge will likely bind up all phosphorous and prevent Phosphorous Acquiring Organisms from growing and therefore the capacity would likely be slightly higher
(3) Assumes a RAS flow of 0.75Q and IRAS flow of 4Q

As a result of the CPE investigative process, FEI noted the following general comments about the anaerobic and anoxic tanks:

- There appears to be too much DO returned to the anoxic tank from the second IFAS tank which may be causing filament growth and preventing good denitrification.

- If anaerobic tank remains in operation as an anaerobic tank, the theoretical capacity of the Anoxic tank would be greater than 2.4 mgd.

4.1.3. IFAS / Blowers

FEI reviewed the IFAS process evaluation in the WUP and did not see any reference made to the capacity of the IFAS system nor the blowers. In addition, the recent influent loading conditions have been noted to be substantially different from the design conditions. Table 13 presents a comparison of the secondary treatment process design capacity and the recent influent wastewater characteristics. Due to the higher concentration of BOD and Ammonia (TKN) in the influent wastewater, the actual hydraulic capacity of the existing IFAS process is less than shown in the design documents.

Table 13. Comparison of Influent Design Criteria and Recent Max Month Influent Data

	Influent	BOD		TSS[3]		TKN	
Condition	MGD	mg/l	lbs/day	mg/l	lbs/day	mg/l	lbs/day
Design Criteria (Current)	1.5	258	3228	211	2640	25	313
Design Criteria (25% fill both tanks)[6]	0.56 - 1.17	330	3228	310	3032	67	313
Design Criteria 65% fill in first IFAS Tanks[7]	2.5	325[8]	6788	310	5949	60[8]	1259
Design Criteria 65% fill both IFAS Tanks[7]	2.86	330	7876	310	7398	67	1600
2012 Influent	1.16	318	2722[4]	481	4165	67[2]	562[2,5]
2013 Influent	1.24[1]	359	3139[4]	492	5616	70[2]	636[2,5]

(1) 2013 max month flow of 1.5MGD occurred in September due to flooding event. June typically has the max month flow rate which was 1.24 mgd in 2013.
(2) Values for TKN were derived from influent ammonia values multiplied by 1.67 which was the assumed conversion described on page 4-16 in the WUP.
(3) Influent TSS is observed to be much higher than design conditions and may be due to solids recycling back to the process from the screw press filtrate.
(4) 2012 max month BOD occurred in August and 2013 max month BOD occurred in January.
(5) 2012 max month ammonia occurred in November and 2013 max month ammonia occurred in August.
(6) This scenario was not modeled by Kruger. However, based on design BOD and TKN loading, the associated flow rate at the increased loading rates ranges between 0.56 and 1.17 based on TKN and BOD as the limiting factors respectively.
(7) This scenario is carbon limited due to the increased level of influent nitrogen.
(8) Values decreased slightly based on discussions during the facility evaluation workshop on February 14, 2014.

FEI contacted Kruger to discuss the changed influent concentrations and how the process is affected with the updated data. Kruger updated their models to identify the IFAS process capacity at the more concentrated loading. They assumed the following when modeling the IFAS train:

- IR rate of 400% of influent flow
- First IFAS basins filled 65% with media, no media in second basin
- Simulated two anaerobic tanks and two anoxic tanks to account for plug flow around baffle

Comments from Kruger as well as their model results are found in Appendix B. Based on the

results, Kruger stated each IFAS train would only have a capacity of 1.43 MGD with 65% fill in each IFAS basin. This results in a total IFAS capacity of 2.86 MGD (requires both tanks to have 65% media fill) at the higher BOD and ammonia concentrations. According to Kruger, denitrification becomes the limiting factor at the higher ammonia concentrations.

As described in the anoxic tank evaluation, the FEI team noted too much DO may be returned to the anoxic tank as a result of the high DO concentration in the second IFAS tank. Kruger developed another model which assumed no media in the second IFAS tank to allow the tank to operate at a lower DO concentration. The result of this model identified each train to have a hydraulic capacity of 1.25 mgd (2.50 mgd total). Kruger mentioned denitrification is the limiting factor in both models; therefore, the additional capacity gained with media in the second IFAS tank is only 0.18 mgd per train (0.36 mgd total). The additional capacity gained by having media in the second tank is considered not attainable as too much oxygen would be returned to the anoxic tank causing denitrification to be hindered. This data is included in Table 13 above.

Based on conversations with the Town of Erie operations staff, one blower is insufficient to maintain DO setpoint and the standby blower automatically turns on to provide sufficient air. The standby blower operates for a few hours during the peak demand and then shuts down as the duty blower is able to maintain DO setpoint. This operation causes electric demand spikes resulting in higher than anticipated electric bills. In order to check the theoretical capacity of the blowers, calculations were developed comparing the blower output at different oxygen transfer efficiencies. These calculations are found in Appendix B and a summary is shown in Table 14.

Each of the two existing K-Turbo blowers have a maximum output of 3500 ACFM at warmer temperatures (3000 ACFM during cold winter conditions) according to the blower HMI screen at 100% speed in the respective conditions. The corresponding blower output in SCFM would be 2560 SCFM in the summer and 2847 SCFM in the winter. This will be insufficient for the capacity modeled by Kruger. Copies of the KTurbo submittal blower curve and updated Aerzen curve are found in Appendix C.

Table 14. Aeration Requirements for IFAS

Parameter	Short Term	Long Term
Influent Flow Rate (mgd)	1.99	2.5
Media Fill in First Tank	65%	65%
Media Fill in Second Tank	0%	0%
Air Demand in First Tank (SCFM)	3,759	4,627
Air Demand in Second Tank (SCFM)	629	876
Total Air Demand (SCFM)	4,388	5,503
Firm Winter Aeration Capacity (SCFM)	2847	2847

(1) Assume blower capacity to be 2,847 / 4,388 SCFM * 1.99 MGD = 1.54 MGD

As a part of the IFAS investigative process, a nitrogen profile was developed by taking ammonia samples in each of the IFAS tanks three times per day. The result of this profile identifies there may be insufficient IFAS media in the first basin to completely nitrify the influent ammonia. Figure 3 provides a summary of ammonia concentrations in each of the IFAS basins in the East train.

Figure 3. Ammonia Profile Over Week Period (January 28th through February 3rd, 2014)

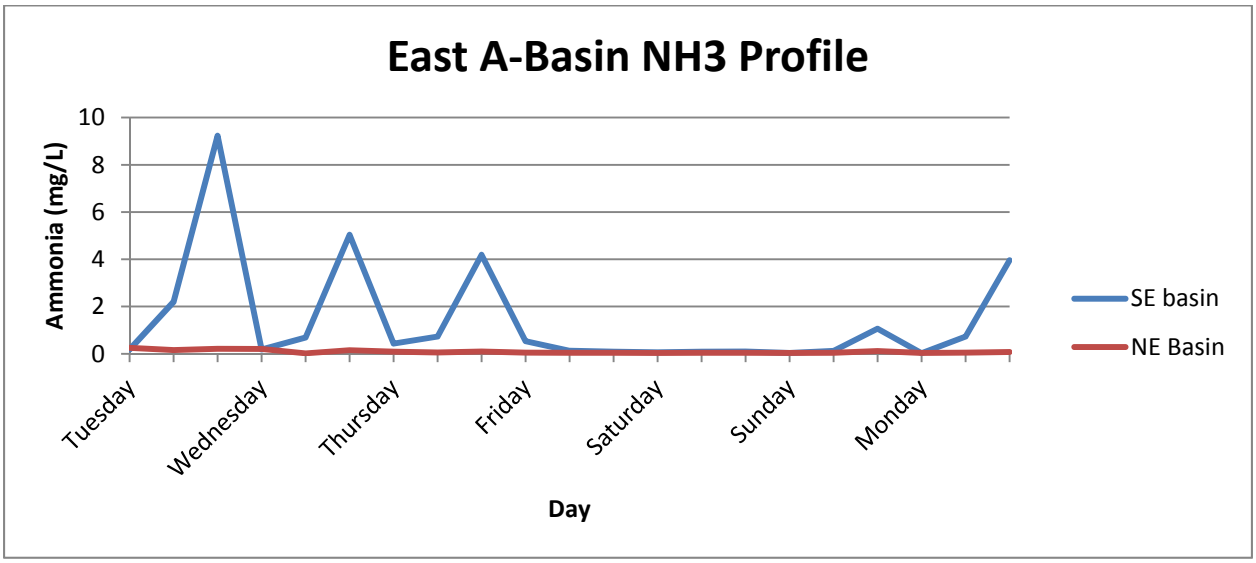

As a result of the CPE investigative process, FEI noted the following general comments about the IFAS and Blowers:

- Influent BOD loading is near plant capacity as it is currently rated.
- Blowers don't have acceptable turndown to provide flexibility of air supply. The blowers are undersized for the air requirements associated with the capacity of the two IFAS trains (with 65% media fill).
- The IFAS basins have manual air valves so air cannot be modulated to individual basins to maintain DO setpoint. There are only two DO probes in the end of each train which causes a slow response time for air adjustment when DO begins to change in the first tank.
- There appears to be insufficient IFAS media in the first IFAS tanks during the diurnal loading peaks throughout the day.
    - Ammonia spikes in the first IFAS tank indicate insufficient nitrifiers.
    - A SOUR test was performed on the IFAS mixed liquor and resulted in 9.3 mg O_2/hr/g sludge and indicates there are insufficient organisms to feed on the available food during peak diurnal organic and ammonia loads.
    - Higher DO concentrations may be required to assure sufficient ammonia removal which may be the cause of the standby blower being required to operate. Further, the ammonia load being significantly higher than the design value requires significantly more air than anticipated.

4.1.4. Clarifier

The WUP states the combined capacity of the two clarifiers is 4.2 mgd for the peak hour flows. FEI evaluated the capacity further based on sludge loading and surface overflow rate and calculated the two clarifiers have a capacity of 4.6 mgd with sludge loading rate as the limiting factor.

The clarifier SVI data from 2013 ranged from 90 to 150 milliliters per gram (mL/g), which is typical for an IFAS activated sludge processes. Therefore, a surface overflow rate (SOR) of 600 gal/ft^2/d and a sludge loading rate (SLR) of 25 lb TSS/ft^2/d are appropriate for this evaluation. The calculation is included in Appendix E and Table 15 summarizes the results.

Table 15. Secondary Clarifier Process Capacity Summary

Unit	Description	Design Evaluation Criteria	Estimated Present Capacity
Secondary Clarifiers	2 clarifiers @ 70 ft dia.	SOR[1] = 600 gal/ft^2/d	**4.6 mgd**
	Total area: 7,696 ft^2	SLR[2] = 25 lb TSS/ft^2/d @ Q_{return} = 0.5 Q and MLSS = 2,500 mg/L	6.2 mgd
RAS Pumps	1600 gpm	1.5 Q required	1.5 mgd

(1) SOR – Surface Overflow Rate must be less than 700 gal/ft^2/d per WPC-DR1
(2) SLR – Sludge Loading Rate must be less than 29 lb TSS/ft^2/d per WPC-DR1

FEI notes the following issues with the secondary clarifier process:

- There is no control of RAS flow rate from each clarifier which causes an imbalance in the solids blanket depth in each clarifier.
- There is no control of splitting RAS flow to each IFAS train which causes an imbalance in the mixed liquor concentrations between the IFAS trains.

4.1.5. Solids Stabilization Process

The solids stabilization process utilizes lime treatment to meet pathogen destruction and time/ temperature to meet vector attraction reduction requirements. The process has been problematic for the operations staff with the screw press being the weak link as it sporadically loses capture rate and fails to operate effectively. This results in solids being recycled back to the head of the plant and putting more pressure on the plant to treat and remove solids effectively.

Operations staff members have worked with consulting engineers, scientists, and the lime stabilization system manufacturer (FKC) multiple times over the past several years to understand the cause of the system's unreliability. FKC has done several bench scale testing efforts with Town of Erie WAS, Town of Erie WTP sludge, and WAS from other WWTF's which point to the alum sludge as the cause for instability in polymer usage, and increased lime and polymer requirements. The Town is recommended to routinely sample and test the alum sludge for content and concentration to clearly understand what is being sent to the WRF. Notes from a site visit by FKC are included in Appendix F.

Operation staff also notes that the screw press fails to operate due to screen blinding during the summer months when the WTP increases Alum use and begins using Powdered Activated Carbon (PAC) to prevent taste and odor issues in drinking water.

The solids stream process is designed to treat 3,632 lbs/day of WAS (max month WAS production) which corresponds to a BOD to WAS TSS yield of 1.12. WAS production during most months of 2013 exceeded this capacity. In addition, the BOD to WAS yield averaged around 1.4 over the past two years. This high yield is likely due to the inorganic alum sludge

from the WTP and solids being recycled back into the secondary treatment process due to poor screw press capture rate. This data is shown in Table 16.

Table 16. WAS Production

Month	Inf BOD (lbs/day)	WAS Flow (mgd)	WAS Load (lbs/day)	Yield
January 2012	2,468	0.035	2,234	0.93
February 2012	2,316	0.034	2,122	0.96
March 2012	2,441	0.032	1,867	0.76
April 2012	2,434	0.094	6,747	1.73
May 2012	2,360	0.049	3,152	2.15
June 2012	2,381	0.052	2,711	1.29
July 2012	2,719	0.062	2,499	1.01
August 2012	2,722	0.074	4,282	1.47
September 2012	2,561	0.060	4,126	1.61
October 2012	2,428	0.061	3,718	1.61
November 2012	2,426	0.049	3,743	1.57
December 2012	2,706	0.065	0	0
January 2013	3,139	0.052	3,057	0.83
February 2013	2,927	0.057	3,660	1.25
March 2013	2,622	0.061	2,984	1.13
April 2013	2,770	0.055	2,965	1.10
May 2013	2,728	0.059	3,353	1.19
June 2013	2,725	0.065	3,929	1.39
July 2013	2,367	0.052	4,231	1.87
August 2013	2,304	0.049	4,496	1.95
September 2013	2,681	0.047	5,549	1.92
October 2013	2,777	0.062	5,234	2.06
November 2013	3,004	0.044	3,334	1.45
December 2013	2,995	0.038	3,324	1.14

The updated WUP did not address the theoretical capacity of the solids stabilization system. As stated above, the design max month WAS production is 3,632 lbs TSS/day. This value is somewhat arbitrary as there are many variables and limiting factors used to account for the capacity of the system. These variables and limiting factors are as follows:

- Concentration of WAS (typically 0.8%)
- Days of storage in WAS holding tank (enough for one day, weekend?)
- Concentration of WAS in Lime Tank (if thickener is used)
- Hours/day and days/week of screw press operation per day
- Screw press process is limited to 60 gpm and 255 lbs TSS/hr

Five scenarios were evaluated to identify how each of the above factors limit the system to different capacities depending on the selections made. Table 17 provides a summary of these scenarios. Calculations supporting each scenario are included in Appendix J.

Table 17. Solids Stabilization System Capacity

Option	Bio-Solids Class	Lime Tank Conc.	Screw Press Run Time (hrs/day / days/week)	WAS Capacity (lbs TSS/day)	MM Influent Capacity (mgd)	Comments
1	A	0.8%	15/7	3,670	1.3	Limited by 60 gpm screw press throughput
2	A	0.8%	20/7	4,800	1.7	Limited by 60 gpm screw press throughput
3	A	0.8%	24/7	5,790	2.1	Limited by 60 gpm screw press throughput
4	B	2%	Liquid Haul[2]	10,450	3.7	Limited by 1.5 day HRT in feed tank (63,000 gal of sludge)
5	B	3%	Liquid Haul[2]	11,300	4.0	Limited by WAS tank volume (170,000 gal)

(1) Assume 0.8% WAS, 330 mg/l BOD influent (MMDF), all WAS is pumped to WAS holding at steady state.
(2) This option requires sludge thickening between the WAS Tank and the Lime Tank. There also may be issues of pumping this thick of material with the existing pump and pipe configuration. Calcium deposits in the existing piping may prevent existing transfer pumps from operating at this concentration for long term operation.

FEI notes the following issues with the solids stabilization process:

- Although the alum sludge from the WTP provides phosphorous removal in the secondary treatment process, the inconsistent alum sludge prevents the solids stabilization process from being operated in a stable manner as polymer dosage requirements frequently change. This requires a single operator to monitor the screw press 30 hours per week. In addition, the alum requires more lime to increase the pH to the required level which in turn requires more polymer to flocculate the sludge prior to dewatering.
- The interior of the filtrate and lime feed piping builds lime deposits which eventually restrict the flow. This has become an ongoing maintenance issue to keep the pipes in operation. However, operations staff cannot clean the lime feed piping from the lime tank/feed tanks to the transfer pumps/dewatering feed pumps in the pump gallery due to the pipe configuration under the slab.
- The screw press throughput limits the class A system capacity.
- Lime is returned to head of plant when feed tanks are decanted under the liquid haul scenario.

4.1.6. North Water Reclamation Facility Capacity Summary

Table 18 presents a summary of the capacity of each process and system and identifies which process limits the overall plant treatment capacity. This data is also summarized in Figure 4.

Table 18. North Water Reclamation Facility Unit Process Capacity

Process	Max Month Capacity (mgd)	Peak Hour Capacity (mgd)	Comments
Headworks			
Mechanical Bar Screen	4.43[1]	12.0	
Influent Pumps	1.52[1]	4.6 Firm	Expandable to 6.9 MGD Firm with addition of 4th pump
Influent Pumps	2.42[1]	6.9 Firm	Expandable to 6.9 MGD Firm with addition of 4th pump
Grit Removal	1.71[1]	4.2	
Secondary Treatment			
Anaerobic Selector	1.7	--	
Anoxic Tank	2.4	--	
IFAS (Current)	1.17	--	
IFAS (65% First IFAS Tank, 0% second IFAS)	2.30		
IFAS (65% Fill Both Tanks)	2.86		
Blowers	1.5		
Secondary Clarifiers	4.6	--	
RAS Pumps	--	--	2.3 MGD Capacity
IR Pumps	--	--	2.6 MGD Capacity
Solids Stabilization Process			
Screw Press	1.3	--	3,632 lbs WAS/day-Class A dewatered product
Liquid Haul	3.7	--	10,455 lbs WAS/day – Class B liquid sludge hauled at 2%
Disinfection			
UV Disinfection	3.25[1]	8.7 each (17.4 total)	
Cloth Media Filter	--	3.6	For reuse only

(1) Derived from peak hour flow rate using Table 4-10 in WUP.
(2) The capacities described above assume a treatment quality to meet Regulation 85.

In order to increase the capacity of the NWRF, the following additions would be required:

- Addition of a second mechanical bar screen
- Addition of fourth influent pump
- Increase media fill in IFAS tanks to 65% and add additional screens
- Install additional RAS pump and Internal Recycle Pump
- Increase solids stabilization process or liquid haul
- Install new blower to supplement existing blowers as necessary

Figure 4 NWRF Unit Process Capacity

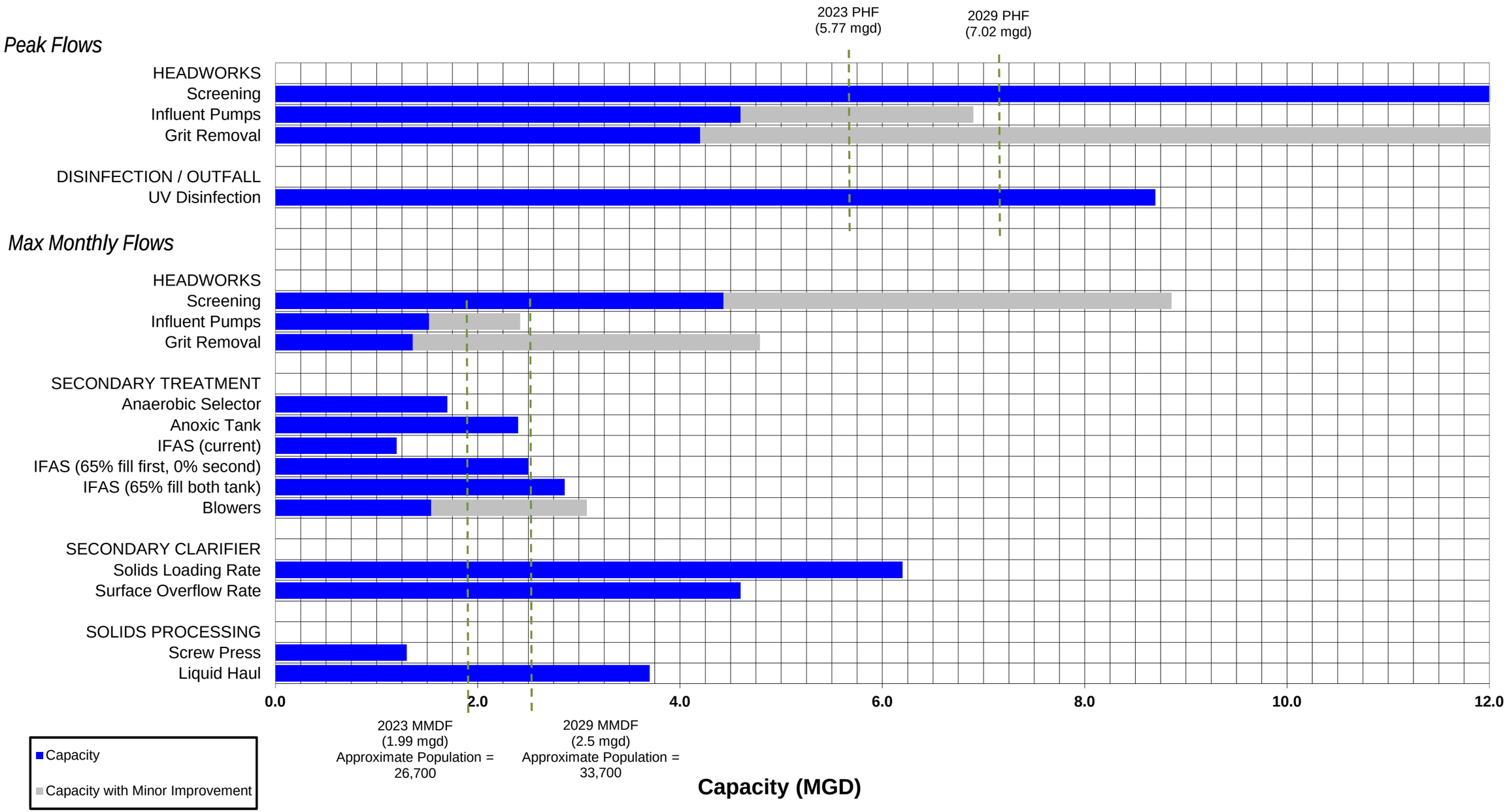

4.2. SOUTH WATER RECLAMATION FACILITY

The capacity evaluation presented in the updated WUP states the SWRF has a capacity of 1.6 mgd and 3,870 lbs BOD/day. However, the SWRF is not designed to consistently remove ammonia below 1 mg/l, denitrify, nor remove phosphorous. In addition, based on previous operations of the SWRF, the facility could only treat around 1 mgd while providing full nitrification. Therefore, without major facility upgrades, the SWRF will only provide the Town with additional treatment capacity until 2017 when the new draft permit becomes effective with more stringent ammonia limits. The WUP presents alternatives with associated cost estimates for upgrading the south facility to be able to meet future nutrient regulations. These alternatives can be further evaluated at the Town's discretion during the Alternatives Evaluation Process.

5. FACILITY OPTIMIZATION

The FEI team reviewed the NWRF treatment process and electrical and I&C systems to identify systems that can be optimized. Based on the review, the following items were identified:

- Process
  - Identify options to dispose of alum sludge at WTP.
  - Move all IFAS media to first tanks and add more media up to 65%. Install more screens in first tank.
  - Reduce DO in second IFAS tank to reduce dissolved oxygen returned to anoxic tank to improve denitrification.
  - Install DO meters in each IFAS tank and actuators on air valves to modulate air to each tank based on DO setpoints.
  - Modify RAS piping to provide control to balance sludge withdraw from clarifiers and balance sludge split to anaerobic selectors.
  - Equalize influent flow to the NWRF to reduce diurnal loading peaks and prevent standby blower operation in conjunction with duty blower.
  - Add additional IFAS media to the first tank to provide more treatment capacity.
- Electrical and I&C
  - Existing 350 kw generator is large enough to support a single 150 hp blower along with other loads identified in the Burns and McDonnell construction drawings. Emergency MCC also has room to accommodate a blower if required. Generator sizing summary included in Appendix G and H.

6. ALTERNATIVES ANALYSIS

Sections 3 and 4 of this report presented a projected influent flow and load summary for this study along with limiting factors of treatment processes. This data is used in the development of alternatives to identify what improvements are necessary at each facility to produce effluent that meet the Town's treatment goals. Table 8 above presents a summary of this information which will be the basis for the alternatives developed in this report.

During the Facility Evaluation Workshop on February 14th, 2014, the design team met with the Town and developed capital improvements project alternatives for further evaluation. The Short Term alternatives provide the Town with options that can be quickly implemented to provide sufficient treatment capacity for current flow and loading. These alternatives assume 2023 max month influent loading will be 1.99 MGD. Maintaining the rated capacity of each facility less than 1.99 MGD will allow the implementation of Regulation 85 nutrient standards to be deferred until 2022. After 2022, the effluent standards will be updated to include the Regulation 85 standards. As stated in the Facility Evaluation Memorandum, the Town has set an effluent nutrient limit goal of less than 10 mg/l Total Inorganic Nitrogen (TIN) and less than 1 mg/l Phosphorous which is more stringent than the Regulation 85 limitations. The Short and Long Term Alternatives are developed such that the capital and O&M costs to either or both facilities include upgrading the secondary treatment process to meet the effluent nutrient goals.

The Short Term Alternatives provide capital and operations and maintenance (O&M) costs for the years 2015 through 2023 and the Long Term Alternatives provide capital and O&M costs for the years 2024 through 2029. In order to understand the total capital and O&M costs associated with future treatment, a Short Term Alternative and Long Term Alternative must be selected and added together.

Due to the negative effects alum sludge has on the operation of the NWRF solids stabilization system, it is assumed the alum sludge will stop flowing to NWRF January 1st, 2019. The calculations for the alternative capital and O&M costs include the costs for alum sludge to be dewatered from 2019 an onward for all alternatives except aerobic digestion at the NWRF.

Capital and O&M costs for alternatives developed in this study will be shown as net present worth (NPW) values for accurate comparison between alternatives. In general, the electric, staff, and other (miscellaneous) costs are derived from past operations costs from the NWRF and SWRF. These costs are modeled to increase at an inflationary rate throughout time along with an assumed growth due to the need for additional electricity, staff, and other costs as influent flow increases.

The costs associated with solids handling are calculated based on a solids production growth rate of 6% per year until 2017 and 4% thereafter as described in the updated WUP. Solids hauling and chemical usage are calculated year by year based on the solids production growth. All O&M costs are added for each year and the present worth of each future cost is calculated in order to develop the O&M net present worth for the alternative.

Tables 19 and 20 summarize the alternatives that will be evaluated in this memorandum.

Table 19. Short Term Alternatives (2015-2023)

	Liquid Stream	Solids Stream
Alternative ST 1	SWRF Treats 0.9 MGD[1]	SWRF Produces Class B Liquid with aerobic digestion
	NWRF Treats 1.09 MGD	NWRF Produces Class A Cake with FKC Process[2]
Alternative ST 2	SWRF Treats 0.9 MGD[1]	SWRF Produces Class B Liquid with aerobic digestion
	NWRF Treats 1.09 MGD	NWRF Produces Class B Liquid with lime stabilization
Alternative ST 3	NWRF Treats 1.99 MGD	NWRF Produces Class B Liquid with lime stabilization
Alternative ST 4	NWRF Treats 1.99 MGD	NWRF Produces Class B Liquid and Class A Cake with lime stabilization[2]

(1) Meet effluent ammonia limits only
(2) Press solids during winter, haul liquid during summer

Table 20. Long Term Alternatives (2024-2029)

	Liquid Stream	Solids Stream
Alternative LT 1	SWRF Treats 1.3 MGD1	SWRF Produces Class B Liquid with aerobic digestion
	NWRF Treats 1.2 MGD1	NWRF Produces Class A Cake with FKC process
Alternative LT 2	SWRF Treats 1.3 MGD	SWRF Produces Class B Liquid with aerobic digestion
	NWRF Treats 1.2 MGD	NWRF Produces Class B Liquid with lime stabilization
Alternative LT 3	NWRF Treats 2.5 MGD	NWRF Produces Class A Cake with FKC Process
Alternative LT 4[2]	NWRF Treats 2.5 MGD	NWRF Produces Class B Cake with Aerobic Digestion
Alternative LT 5	NWRF Treats 2.5 MGD	NWRF Produces Class B Liquid with Lime Stabilization
Alternative LT 6	NWRF Treats 2.5 MGD	NWRF Produces Class A Cake with Schwing Lime Stabilization
Alternative LT 7	SWRF Used as EQ	N/A

(1) NWRF is permitted at 1.5 MGD with 1.2 MGD as max flow prior to beginning engineering for plant expansion. The SWRF is permitted for 1.6 MGD with 1.3 MGD as the max flow prior to beginning engineering for plant expansion.
(2) Alternative 4 is the only alternative that can handle the continued flow of alum sludge from the WTP and assumes the WTP continues to send alum sludge to the NWRF.

6.1. SHORT TERM ALTERNATIVES

The Short Term Alternatives look at options for quickly increasing the operational wastewater treatment capacity the Towns' treatment facilities. The max month influent BOD loading has nearly exceeded the NWRF rated capacity during several months in the last year which requires the Town to pursue expanding the treatment capacity of the NWRF or bringing the SWRF back on line. Evaluated options look at the benefit of utilizing the SWRF for several years until the

facility permit is updated to include nutrient limits. This may relieve the burden on the NWRF for a few years until longer term changes can be implemented. The following sections describe in detail the work and costs associated with each alternative.

6.1.1. Short Term – Alternative ST 1 – NWRF Shares Treatment with SWRF, Cake and Liquid Haul

Alternative ST 1 assumes the wastewater will be split between the SWRF and the NWRF and each treatment facility will handle its own solids production. The SWRF will treat 0.9 MGD (45%) with associated class B liquid hauling and the NWRF will treat 1.09 MGD (55%) with associated class A cake hauling. This alternative allows for the least amount of capital to be spent as the existing SWRF would simply be started back up to reduce the load on the NWRF. A Biowin model output demonstrating the SWRF can meet the effluent ammonia limits is provided in Appendix N. Table 21 presents a summary of the influent and sludge loading characteristics at each facility.

Table 21. Alternative ST 1 – Influent and Sludge Loading

Parameter	SWRF	NWRF	Total
Influent Flow (mgd)	0.9	1.09	1.99
Influent BOD (ppd)	2,430	2,942	5,372
Influent NH3 (ppd)	270	326	596
Sludge With Alum (ppd)	3,402	4,120	7,521
Sludge No Alum (ppd)	2,721	3,296	6,017

Alternative ST 1 will have the following associated capital improvements which are described in detail in Appendix K:

- Clean out SWRF aeration and digester tanks, replace diffusers and probes, and service all pumps. It is assumed the Town will perform all cleaning and replacement of diffusers and instruments.
- Construct a sludge load out system at the NWRF including floating decanters and pumps in each feed tank, piping to a load out station, and electrical work to operate the pumps. Install two additional pumps to pump supernatant back to head of plant.

Alternative ST 1 will have the following associated O&M costs which are described in detail in Appendix K:

- SWRF – electric, contract operations, other costs, Class B liquid sludge disposal (1.5% concentration). Assume daily liquid sludge volume decreases in 2019 when WTP sludge is no longer sent to the WRF for processing.
- NWRF - electric, operations staff, other costs, gas costs, and lime stabilized Class A cake haul (30% concentration) until 2023. Assume daily liquid sludge volume decreases in 2019 and thereafter when WTP sludge is no longer sent to the WRF for processing. See Appendix F for the results from a study by FKC showing the negative effects WTP alum sludge has on the NWRF sludge. The study analyzed the lime usage required for treating a sample from the Erie NWRF as well as a sample from the Sequim, WA WWTP and the results showed a significant increase in lime due to the presence of alum sludge. Due to

the results of this study, the Town intends to conduct a full scale pilot study to determine the actual lime usage and polymer usage without the presence of alum sludge.

The following assumptions were made in determining the O&M costs for this alternative:

- SWRF 2010 O&M and NWRF 2012 O&M costs were used in developing electric, staff, and "other" or miscellaneous costs
- SWRF digested sludge would be thickened to 1.5% and hauled as class B product
- NWRF solids would be treated with lime with the following assumptions:
    - Sludge containing alum from the WTP (2015-2018) will be thickened by decanting to 2.5% and hauled as liquid during the summer months using 1318 lbs/DT of lime and no polymer. Alum sludge will be pressed to 30% and hauled as a class A product during the winter months using 553 lbs/DT of lime and 178 lbs/DT of polymer. It is assumed that liquid haul is necessary when the alum sludge exceeds 600 lbs/day.
    - Sludge (2019-2023) will be pressed to 30% and hauled as a class A product year round using 300 lbs/DT lime and 40 lbs/DT polymer.

The Capital and O&M costs for this alternative are presented in Table 22 and advantages and disadvantages are presented in Table 23.

Table 22. Alternative ST 1 – Net Present Worth

Parameter	Cost
Capital Cost	$370,600
Annual O&M Cost[1]	$1,868,800
NPW of O&M Costs	$16,819,100
Total NPW	$17,189,700

(1) Annual O&M costs are the average annual O&M cost for time period 2015 to 2023.
(2) Costs derived from SWRF ST L1, SWRF ST S1, NWRF ST L1, and NWRF ST S1

Table 23. Alternative ST 1 - Advantages and Disadvantages

Advantages	Disadvantages
-Low capital cost -Fast implementation -No Site Application process required	-High O&M costs -Town operates two treatment facilities -SWRF may have difficulty meeting ammonia limits after 2017 per WUP

6.1.2. Short Term – Alternative ST 2 – NWRF Shares Treatment with SWRF, Liquid Haul Only

Alternative ST 2 is the same as Alternative ST 1 except all biosolids generated at the NWRF will be stabilized by lime and disposed of as a Class B liquid. The generated wastewater will be split between the SWRF and the NWRF and each treatment facility will handle its own solids production. The SWRF will treat 0.9 MGD (45%) and the NWRF will treat 1.09 MGD (55%). A Biowin model output demonstrating the SWRF can meet the effluent ammonia limits are provided in Appendix N. Table 24 presents a summary of the influent and sludge loading characteristics at each facility.

Table 24. Alternative ST 2 – Influent and Sludge Loading

Parameter	SWRF	NWRF	Total
Influent Flow (mgd)	0.9	1.09	1.99
Influent BOD (ppd)	2,430	2,942	5,372
Influent NH3 (ppd)	270	326	596
Sludge With Alum (ppd)	3,402	4,120	7,521
Sludge No Alum (ppd)	2,721	3,296	6,017

Alternative ST 2 will have the following associated capital improvements which are described in detail in Appendix K:

- Clean out SWRF aeration and digester tanks, replace diffusers and probes, and service all pumps. It is assumed town will perform all cleaning and replacement of diffusers and instruments.
- Construct a sludge load out system at the NWRF including floating decanters and pumps in each feed tank, piping to a load out station, and electrical work to operate the pumps. Install two additional pumps to pump supernatant back to head of plant.

Alternative ST 2 will have the following associated O&M costs which are described in detail in Appendix K:

- SWRF – electric, contract operations, other costs, Class B liquid sludge disposal (1.5% concentration). Assume daily liquid sludge volume decreases in 2019 and thereafter when WTP sludge is no longer sent to the WRF for processing.
- NWRF - electric, operations staff, other costs, and lime stabilized Class B liquid haul (2.5% concentration) until 2023. Assume daily liquid sludge volume decreases in 2019 and thereafter when WTP sludge is no longer sent to the WRF for processing.

The following assumptions were made in determining the O&M costs for this alternative:

- SWRF 2010 O&M and NWRF 2012 O&M costs were used in developing electric, staff, and “other” or miscellaneous costs
- SWRF digested sludge would be thickened to 1.5% and hauled as class B product
- NWRF solids would be treated with lime with the following assumptions:
    - Sludge containing alum from the WTP (2015-2018) will be thickened by decanting to 2.5% and hauled as liquid during the summer months using 1318 lbs/DT of lime and no polymer. Alum sludge will be thickened by decanting to 2.5% and hauled as liquid during the winter months using 553 lbs/DT of lime and no polymer. It is assumed that liquid haul is necessary when the alum sludge exceeds 600 lbs/day.
    - Sludge (2019-2023) will be thickened by decanting to 2.5% and hauled as liquid year round using 300 lbs/DT lime and no polymer.

The Capital and O&M costs for this alternative are presented in Table 25 and advantages and disadvantages are presented in Table 26.

Table 25. Alternative ST 2 – Net Present Worth

Parameter	Cost
Capital Cost	$370,600
Annual O&M Cost[1]	$1,970,700
NPW of O&M Costs	$17,736,900
Total NPW	$18,107,500

(1) Annual O&M costs are the average annual O&M cost for time period 2015 to 2023.
(2) Costs derived from SWRF ST L1, SWRF ST S1, NWRF ST L1, and NWRF ST S2

Table 26. Alternative ST 2 - Advantages and Disadvantages

Advantages	Disadvantages
-Low capital cost -Fast implementation -No Site Application process required -No polymer costs	-High O&M costs -Town operates two treatment facilities -SWRF may have difficulty meeting ammonia limits after 2017 per WUP

6.1.3. Short Term – Alternative ST 3 – NWRF Treats All Influent, Liquid Haul Only

Alternative ST 3 assumes all wastewater will be treated by the NWRF and the SWRF will remain offline. This alternative assumes the WAS produced at the NWRF will be treated with lime to a pH of 12 to meet vector attraction and pathogen destruction requirements. The sludge will be allowed to settle and supernatant will be removed to increase the solids concentration to 2.5%. Table 27 presents a summary of the influent and sludge loading characteristics.

Table 27. Alternative ST 3 – Influent and Sludge Loading

Parameter	NWRF	Total
Influent Flow (mgd)	1.99	1.99
Influent BOD (ppd)	5,372	5,372
Influent NH3 (ppd)	596	596
Sludge With Alum (ppd)	7,521	7,521
Sludge No Alum (ppd)	6,017	6,017

Alternative ST 3 will have the following associated capital improvements which are described in detail in Appendix K:

- Install fourth influent pump, upgrade grit system, install mixers in second IFAS tanks (swing tanks), install second IR pump, resheave existing RAS pumps to have 2000 gpm output, install third blower, and install additional Kruger IFAS media.
- Construct a sludge load out system at the NWRF including new pump in pump gallery, piping to a load out station, and electrical work to operate the pumps.
- Install floating decanters in Lime Tank and Feed Tanks.
- Install Sulfuric acid storage and pump system.

Alternative ST 3 will have the following associated O&M costs which are described in detail in Appendix K:

- NWRF - electric, operations staff, other costs, Class B sludge cake (2.5% concentration) disposal. Assume daily liquid sludge volume decreases in 2019 and thereafter when WTP sludge is no longer sent to the WRF for processing.

The following assumptions were made in determining the O&M costs for this alternative:

- NWRF 2012 O&M costs were used in developing electric, staff, and "other" or miscellaneous costs
- NWRF solids would be treated with lime with the following assumptions:
    - Sludge containing alum from the WTP (2015-2018) will be thickened by decanting to 3.5% and hauled as liquid during the summer months using 1318 lbs/DT of lime and 10 lbs/DT polymer. Alum sludge will be thickened by a decanting to 3.5% and hauled as liquid during the winter months using 553 lbs/DT of lime and 10 lbs/DT polymer.
    - Sludge (2019-2023) will be thickened by decanting to 3.5% and hauled as liquid year round using 300 lbs/DT lime and 10 lbs/DT polymer.

The Capital and O&M costs for this alternative are presented in Table 28 and advantages and disadvantages are presented in Table 29.

Table 28. Alternative ST 3 – Net Present Worth

Parameter	Cost
Capital Cost	$2,146,100
Annual O&M Cost[1]	$1,285,500
NPW of O&M Costs	$11,569,200
Total NPW	$13,715,300

(1) Annual O&M costs are the average annual O&M cost for time period 2015 to 2023.
(2) Costs derived from NWRF ST L2, and NWRF ST S3

Table 29. Alternative ST 3 - Advantages and Disadvantages

Advantages	Disadvantages
-Treatment upgrades to NWRF can remain when capacity is increased to 2.5 MGD -One treatment facility is operated. -Effluent permit can be met through 2023 -Lower O&M costs	-High capital cost

6.1.4. Short Term – Alternative ST 4 – NWRF Treats All Influent, Liquid Haul and Cake Haul

Alternative ST 4 assumes all wastewater will be treated by the NWRF and the SWRF will remain offline. This alternative assumes the WAS produced at the NWRF will be treated with lime to a pH of 12 to meet vector attraction and pathogen destruction requirements. The sludge will be allowed to settle and supernatant will be removed to increase the solids concentration to 2.5%. During the summer months when alum sludge discharge to the NWRF is the highest, the

liquid sludge will be hauled off for disposal. During the winter months, the sludge will be stabilized to a Class A product and hauled off as a cake. Table 30 presents a summary of the influent and sludge loading characteristics.

Table 30. Alternative ST 4 – Influent and Sludge Loading

Parameter	NWRF	Total
Influent Flow (mgd)	1.99	1.99
Influent BOD (ppd)	5,372	5,372
Influent NH3 (ppd)	596	596
Sludge With Alum (ppd)	7,521	7,521
Sludge No Alum (ppd)	6,017	6,017

Alternative ST 4 will have the following associated capital improvements which are described in detail in Appendix K:

- Install fourth influent pump, upgrade grit system, install mixers in second IFAS tanks (swing tanks), install second IR pump, resheave existing RAS pumps to have 2000 gpm output, install third blower, and install additional Kruger IFAS media in first IFAS tanks (move all IFAS from second tanks to first tanks).
- Construct a sludge load out system at the NWRF including new pump in pump gallery, piping to a load out station, and electrical work to operate the pumps.
- Install floating decanters in Lime Tank and Feed Tanks.
- Install Sulfuric acid storage and pump system.

Alternative ST 4 will have the following associated O&M costs which are described in detail in Appendix K:

- NWRF - electric, operations staff, other costs, Class B sludge cake (2.5% concentration) disposal. Assume daily liquid sludge volume decreases in 2019 and thereafter when WTP sludge is no longer sent to the WRF for processing.

The following assumptions were made in determining the O&M costs for this alternative:

- NWRF 2012 O&M costs were used in developing electric, staff, and “other” or miscellaneous costs
- NWRF solids would be treated with lime with the following assumptions:
    - Sludge containing alum from the WTP (2015-2018) will be thickened by decanting to 3.5% and hauled as liquid during the summer months using 1318 lbs/DT of lime and 10 lbs/DT polymer. Alum sludge will be thickened by decanting to 3.5% and hauled as liquid during the winter months using 553 lbs/DT of lime and 10 lbs/DT polymer.
    - Sludge (2019-2023) will be thickened by decanting to 3.5% and hauled as liquid year round using 300 lbs/DT lime and 10 lbs/DT polymer.

The Capital and O&M costs for this alternative are presented in Table 31 and advantages and disadvantages are presented in Table 32.

Table 31. Alternative ST 4 – Net Present Worth

Parameter	Cost
Capital Cost	$2,146,100
Annual O&M Cost[1]	$1,095,300
NPW of O&M Costs	$9,857,900
Total NPW	$12,004,000

(1) Annual O&M costs are the average annual O&M cost for time period 2015 to 2023.
(2) Costs derived from NWRF ST L2, and NWRF ST S3

Table 32. Alternative ST 4 - Advantages and Disadvantages

Advantages	Disadvantages
-Treatment upgrades to NWRF can remain when capacity is increased to 2.5 MGD -One treatment facility is operated. -Effluent permit can be met through 2023 -Lower O&M costs	-High capital cost

6.2. LONG TERM ALTERNATIVES

The long term alternatives look at options for increasing treatment capacity to 2.5 MGD while meeting the Towns treatment goals and therefore meeting Regulation 85. These alternatives closely resemble the short term alternatives with options for splitting the wastewater between two facilities and allowing the NWRF to treat all flows. The following sections describe in detail the work and costs associated with each alternative.

6.2.1. Long Term – Alternative LT 1 – NWRF Shares Treatment with SWRF, Cake and Liquid Haul

Alternative LT 1 assumes the wastewater will be split between the SWRF and the NWRF and each treatment facility will handle its own solids production. The SWRF will treat 1.3 MGD (52%) with associated class B liquid hauling and the NWRF will treat 1.2 MGD (48%) with associated class A cake hauling. This alternative requires the SWRF to undergo some major improvements to meet the Town's effluent treatment goals and therefore Regulation 85. Table 33 presents a summary of the influent and sludge loading characteristics at each facility.

Table 33. Alternative LT 1 – Influent and Sludge Loading

Parameter	SWRF	NWRF	Total
Influent Flow (mgd)	1.3	1.2	2.5
Influent BOD (ppd)	3,535	3,263	6,798
Influent NH3 (ppd)	392	361	754
Sludge No Alum (ppd)	3,959	3,655	7,614

Alternative LT 1 will have the following associated capital improvements which are described in detail in Appendix L:

- Install concrete baffles in existing aeration tanks to create anoxic, IFAS, and swing tanks. Install new blower to supplement existing blowers, install IR pumps, anoxic mixers, swing tank mixers, service existing equipment, install chemical feed system to remove

phosphorous. Construct a building and install a rotary drum thickener to thicken WAS to utilize existing aerobic digester volume and prevent further digester volume from being constructed.

- Install sludge load out system will be constructed at the SWRF including floating decanters and pumps in each feed tank, piping to a load out station, and electrical work to operate the pumps. Install two additional pumps to pump supernatant back to head of plant.
- Assume no changes required at NWRF for this alternative.

Alternative LT 1 will have the following associated O&M costs which are described in detail in Appendix L:

- SWRF – electric, operations staff, other costs, Class B liquid sludge disposal (3.5% concentration).
- NWRF - electric, operations staff, other costs, gas costs, lime stabilized Class A cake haul (30% concentration).

The following assumptions were made in determining the O&M costs for this alternative:

- SWRF 2010 O&M costs were used in developing staff, and "other" or miscellaneous costs. Electric costs for the new IFAS process are based on 2 blowers operating at 150 hp.
- NWRF 2012 O&M costs were used in developing electric, staff, and "other" or miscellaneous costs.
- SWRF digested sludge would be thickened to 3.5% with a mechanical thickener and hauled as class B liquid using 10 lbs/DT of polymer.
- NWRF solids would be treated with lime with the following assumptions:
    - Sludge (2024-2029) will be pressed to 30% and hauled as a class A cake year round using 300 lbs/DT lime and 40 lbs/DT polymer.

The Capital and O&M costs for this alternative are presented in Table 34 and advantages and disadvantages are presented in Table 35.

Table 34. Alternative LT 1 – Net Present Worth

Parameter	Cost
Capital Cost	$4,811,400
Annual O&M Cost[1]	$1,919,600
NPW of O&M Costs	$11,517,500
Total NPW	$16,328,900

(1) Annual O&M costs are the average annual O&M cost for time period 2024 to 2029.

(2) Costs derived from SWRF LT L1, SWRF LT S1, NWRF LT L1, and NWRF LT S1

Table 35. Alternative LT 1 - Advantages and Disadvantages

Advantages	Disadvantages
-No changes to NWRF – delayed improvements -Utilize SWRF infrastructure	-High O&M costs -Town operates two treatment facilities -High capital costs

6.2.2. Long Term – Alternative LT 2 – NWRF Shares Treatment with SWRF, Liquid Haul Only

Alternative LT 2 is the same as Alternative LT 1 except all biosolids generated at the NWRF will be stabilized by lime and disposed of as a Class B liquid. The generated wastewater will be split between the SWRF and the NWRF and each treatment facility will handle its own solids production. The SWRF will treat 1.3 MGD (52%) with associated class B liquid hauling and the NWRF will treat 1.2 MGD (48%) with associated class B liquid hauling. This alternative requires the SWRF to undergo some major improvements to meet the Town's effluent treatment goals and therefore Regulation 85. Table 36 presents a summary of the influent and sludge loading characteristics at each facility.

Table 36. Alternative LT 2 – Influent and Sludge Loading

Parameter	SWRF	NWRF	Total
Influent Flow (mgd)	1.3	1.2	2.5
Influent BOD (ppd)	3,535	3,263	6,798
Influent NH3 (ppd)	392	361	754
Sludge No Alum (ppd)	3,959	3,655	7,614

Alternative LT 2 will have the following associated capital improvements which are described in detail in Appendix L:

- Install concrete baffles in existing aeration tanks to create anoxic, IFAS, and swing tanks. Install new blower to supplement existing blowers, install IR pumps, anoxic mixers, swing tank mixers, service existing equipment, install chemical feed system to remove phosphorous. Construct a building and install a rotary drum thickener to thicken WAS to utilize existing aerobic digester volume and prevent further digester volume from being constructed.
- Install sludge load out system will be constructed at the SWRF including floating decanters and pumps in each feed tank, piping to a load out station, and electrical work to operate the pumps. Install two additional pumps to pump supernatant back to head of plant.
- A sludge load out system will be constructed at the NWRF which includes floating decanters and pumps in each feed tank pump in each feed tank, piping to a load out station, and electrical work to operate the pumps. Two additional pumps will pump supernatant back to head of plant.

Alternative LT 2 will have the following associated O&M costs which are described in detail in Appendix L:

- SWRF – electric, operations staff, other costs, Class B liquid sludge disposal (3.5% concentration).
- NWRF - electric, operations staff, other costs, lime stabilized Class B liquid haul (2.5% concentration).

The following assumptions were made in determining the O&M costs for this alternative:

- SWRF 2010 O&M costs were used in developing staff, and "other" or miscellaneous costs. Electric costs for the new IFAS process are based on 2 blowers operating at 150 hp.
- NWRF 2012 O&M costs were used in developing electric, staff, and "other" or miscellaneous costs.
- SWRF digested sludge would be thickened to 3.5% with a mechanical thickener and hauled as class B liquid using 10 lbs/DT of polymer.
- NWRF solids would be treated with lime with the following assumptions:
    - Sludge (2024-2029) will be thickened by decanting to 2.5% and hauled as a class B liquid year round using 300 lbs/DT lime and no polymer.

The Capital and O&M costs for this alternative are presented in Table 37 and advantages and disadvantages are presented in Table 38.

Table 37. Alternative LT 2 – Net Present Worth

Parameter	Cost
Capital Cost	$5,018,900
Annual O&M Cost[1]	$2,096,300
NPW of O&M Costs	$12,577,700
Total NPW	$17,596,600

(1) Annual O&M costs are the average annual O&M cost for time period 2023 to 2029.
(2) Costs derived from SWRF LT L1, SWRF LT S1, NWRF LT L1, and NWRF LT S2

Table 38. Alternative LT 2 - Advantages and Disadvantages

Advantages	Disadvantages
-Utilize SWRF infrastructure	-High O&M costs -Town operates two treatment facilities -High capital costs

6.2.3. Long Term – Alternative LT 3 – NWRF Treats All Influent, FKC Screw Press with Cake Haul

Alternative LT 3 assumes all wastewater will be treated by the NWRF and the SWRF will remain offline. This alternative assumes the NWRF would undergo some major improvements to increase the liquid and solids stream treatment capacity. All WAS produced at the NWRF will be treated with two FKC screw presses to produce a class A cake. Table 39 presents a summary of the influent and sludge loading characteristics.

Table 39. Alternative LT 3 – Influent and Sludge Loading

Parameter	NWRF	Total
Influent Flow (mgd)	2.5	1.99
Influent BOD (ppd)	6,798	6,798
Influent NH3 (ppd)	754	754
Sludge No Alum (ppd)	7,614	7,614

Alternative LT 3 will have the following associated capital improvements which are described in detail in Appendix L:

- Install new RAS pump, install piping to split RAS flow between two trains, install second influent band screen.
- Install second FKC screw press and associated systems to increase solids treatment capacity.

Alternative LT 3 will have the following associated O&M costs which are described in detail in Appendix L:

- NWRF - electric, operations staff, gas costs, other costs, Class A sludge cake (30% concentration) disposal.

The following assumptions were made in determining the O&M costs for this alternative:

- NWRF 2012 O&M costs were used in developing electric, staff, and "other" or miscellaneous costs
- NWRF solids would be treated with lime with the following assumptions:
    - Sludge (2024-2029) will be treated with lime and dewatered with two FKC screw presses to 30% and hauled as cake year round using 300 lbs/DT lime and 40 lbs/DT polymer.

The Capital and O&M costs for this alternative are presented in Table 40 and advantages and disadvantages are presented in Table 41.

Table 40. Alternative LT 3 – Net Present Worth

Parameter	Cost
Capital Cost	$2,109,200
Annual O&M Cost[1]	$1,207,800
NPW of O&M Costs	$7,246,900
Total NPW	$9,356,100

(1) Annual O&M costs are the average annual O&M cost for time period 2023 to 2029.

(2) Costs derived from NWRF LT L2, and NWRF LT S3

Table 41. Alternative ST 3 - Advantages and Disadvantages

Advantages	Disadvantages
-One treatment facility is operated. -Effluent permit can be met through 2029 -Lower O&M costs -Lower capital costs	-Long term lime effect on piping and treatment facility unknown

6.2.4. Long Term – Alternative LT 4 – NWRF Treats All Influent, Aerobic Digestion Cake Haul

Alternative LT 4 assumes all wastewater will be treated by the NWRF and the SWRF will remain offline. This alternative assumes the NWRF would undergo some major improvements to increase the liquid and solids stream treatment capacity. All WAS produced at the NWRF will be treated with enhanced aerobic digestion to produce a class B cake. Enhanced aerobic digestion would treat thickened sludge in multiple digesters in series. Installing digesters in series allows for decreased SRT per Appendix E in the EPA publication "Control of Pathogens and Vector Attraction in Sewage Sludge". In addition, thickening WAS prior to digestion allows the sludge to gain temperature allowing for further decrease in required SRT. For this study, the aerobic digester was assumed to provide 42 days per the above mentioned EPA publication with 4 digesters in series. See Appendix P for a figure showing the approximate size of the digester. In addition, this alternative assumes all alum sludge continues to flow to the NWRF from the WTP.

Table 42 presents a summary of the influent and sludge loading characteristics.

Table 42. Alternative LT 4 – Influent and Sludge Loading

Parameter	NWRF	Total
Influent Flow (mgd)	2.5	1.99
Influent BOD (ppd)	6,798	6,798
Influent NH3 (ppd)	754	754
Sludge No Alum (ppd)	7,614	7,614

Alternative LT 4 will have the following associated capital improvements which are described in detail in Appendix L:

- Install new RAS pump, install piping to split RAS flow between two trains, install second influent band screen.
- Install aerobic digester with blower building constructed on top of tank. Install RDT, TWAS pumps, and new screw press inside building.

Alternative LT 4 will have the following associated O&M costs which are described in detail in Appendix L:

- NWRF - electric, operations staff, other costs, polymer costs, and Class B sludge cake disposal.

The following assumptions were made in determining the O&M costs for this alternative:

- NWRF 2012 O&M costs were used in developing electric, staff, and "other" or miscellaneous costs. Additional electric associated with the aerobic digestion blowers was added to the electric costs for the rest of the facility.

- NWRF solids would be treated with lime with the following assumptions:
  - Sludge (2024-2029) will be thickened in a mechanical thickener to 3% and treated in an aerobic digester and dewatered with a screw presses to 20% and hauled as class B cake year round using 55 lbs/DT polymer (10lbs/DT for thickening and 45 lbs/DT for dewatering).

The Capital and O&M costs for this alternative are presented in Table 43 and advantages and disadvantages are presented in Table 44.

Table 43. Alternative LT 4 – Net Present Worth

Parameter	Cost
Capital Cost	$4,127,900
Annual O&M Cost[1]	$1,485,300
NPW of O&M Costs	$8,912,100
Total NPW	$13,040,000

(1) Annual O&M costs are the average annual O&M cost for time period 2023 to 2029.
(2) Costs derived from NWRF LT L2, and NWRF LT S4

Table 44. Alternative ST 4 - Advantages and Disadvantages

Advantages	Disadvantages
-One treatment facility is operated. -Effluent permit can be met through 2029 -Lower O&M costs -Aerobic digestion not affected by alum sludge if town decides to continue to treat sludge at WRF	-New tank infrastructure required -Existing lime and screw press infrastructure not used

6.2.5. Long Term – Alternative LT 5 – NWRF Treats All Influent, Liquid Haul Lime Sludge

Alternative LT 5 assumes all wastewater will be treated by the NWRF and the SWRF will remain offline. This alternative assumes the NWRF would undergo major improvements to increase the liquid and solids stream treatment capacity. All WAS produced at the NWRF would be treated with lime to produce a class B liquid.

Table 45 presents a summary of the influent and sludge loading characteristics.

Table 45. Alternative LT 5 – Influent and Sludge Loading

Parameter	NWRF	Total
Influent Flow (mgd)	2.5	1.99
Influent BOD (ppd)	6,798	6,798
Influent NH3 (ppd)	754	754
Sludge No Alum (ppd)	7,614	7,614

Alternative LT 5 will have the following associated capital improvements which are described in detail in Appendix L:

- Install new RAS pump, install piping to split RAS flow between two trains, install second influent band screen.
- Install a rotary drum thickener to thicken WAS to 3.5% prior to treatment with lime.
- Construct a sludge load out system for liquid sludge hauling.

Alternative LT 5 will have the following associated O&M costs which are described in detail in Appendix L:

- NWRF - electric, operations staff, other costs, lime costs, polymer costs, and Class B sludge liquid (4.5% concentration with lime addition) disposal.

The following assumptions were made in determining the O&M costs for this alternative:

- NWRF 2012 O&M costs were used in developing electric, staff, and "other" or miscellaneous costs.
- NWRF solids would be treated with lime with the following assumptions:
    - Sludge (2024-2029) will be thickened in a mechanical thickener to 3.5% and treated with lime before being hauled as class B liquid year round using 300 lbs/DT lime.

The Capital and O&M costs for this alternative are presented in Table 46 and advantages and disadvantages are presented in Table 47.

Table 46. Alternative LT 5 – Net Present Worth

Parameter	Cost
Capital Cost	$1,096,300
Annual O&M Cost[1]	$1,430,000
NPW of O&M Costs	$8,579,800
Total NPW	$9,676,100

(1) Annual O&M costs are the average annual O&M cost for time period 2023 to 2029.

(2) Costs derived from NWRF LT L2, and NWRF LT S5

Table 47. Alternative ST 5 - Advantages and Disadvantages

Advantages	Disadvantages
-One treatment facility is operated. -Effluent permit can be met through 2029 -Lower capital costs	-Existing lime and screw press infrastructure not used -Higher O&M costs

6.2.6. Long Term – Alternative LT 6 – NWRF Treats All Influent, Schwing Screw Press

Alternative LT 6 assumes all wastewater will be treated by the NWRF and the SWRF will remain offline. This alternative assumes the NWRF would undergo major improvements to increase the liquid and solids stream treatment capacity. All WAS produced at the NWRF would be treated with an alternative lime treatment screw press process by Schwing. This process is similar to the existing FKC process except that WAS is dewatered prior to lime treatment. The lime reacts with the thicker solids concentration and auto thermally heats the sludge up to 70 degrees C. Schwing has been successful in getting a variance in other states for the process as the temperature doesn't meet the EPA 503 regulations for vector attraction reduction with a lime treatment process. This alternative is viable but would not utilize the existing FKC infrastructure.

Table 48 presents a summary of the influent and sludge loading characteristics.

Table 48. Alternative LT 6 – Influent and Sludge Loading

Parameter	NWRF	Total
Influent Flow (mgd)	2.5	1.99
Influent BOD (ppd)	6,798	6,798
Influent NH3 (ppd)	754	754
Sludge No Alum (ppd)	7,614	7,614

Alternative LT 6 will have the following associated capital improvements which are described in detail in Appendix L:

- Install new RAS pump, install piping to split RAS flow between two trains, install second influent band screen.
- Install a Schwing screw press process in the existing dewatering building to replace existing FKC process

Alternative LT 6 will have the following associated O&M costs which are described in detail in Appendix L:

- NWRF - electric, operations staff, other costs, lime costs, polymer costs, and Class A sludge cake (25% concentration) disposal.

The following assumptions were made in determining the O&M costs for this alternative:

- NWRF 2012 O&M costs were used in developing electric, staff, and "other" or miscellaneous costs.
- NWRF solids would be treated with lime with the following assumptions:

- Sludge (2024-2029) will be dewatered in a screw press to 25% and treated with lime in a Schwing Bioset process. The resulting class A cake would be hauled year round using 1100 lbs/DT of lime and 40 lbs/DT polymer.

The Capital and O&M costs for this alternative are presented in Table 49 and advantages and disadvantages are presented in Table 50.

Table 49. Alternative LT 6 – Net Present Worth

Parameter	Cost
Capital Cost	$2,676,300
Annual O&M Cost[1]	$1,376,400
NPW of O&M Costs	$8,258,500
Total NPW	$10,934,800

(1) Annual O&M costs are the average annual O&M cost for time period 2023 to 2029.
(2) Costs derived from NWRF LT L2, and NWRF LT S6

Table 50. Alternative ST 6 - Advantages and Disadvantages

Advantages	Disadvantages
-One treatment facility is operated. -Effluent permit can be met through 2029 -Lower capital costs	-Existing lime and screw press infrastructure not used -Higher O&M costs

6.2.7. Long Term – Alternative LT 7 – SWRF Used As Influent Equalization

Alternative LT 7 assumes the SWRF would be converted to be an influent equalization process. The splitter box located to the east of the SWRF would be modified to include an actuator to modulate the gate to divert flow to the SWRF during peak flow periods. The influent would flow to the existing influent lift station and be pumped to the existing headworks and into the existing aeration basins. The existing aeration system would be used to maintain aerobic conditions within the influent. During low flow periods, the influent could be pumped back into the sewer system to equalize the flow.

This alternative would only be applicable for use when the NWRF is the sole operating treatment facility.

Alternative LT 7 will have the following associated capital improvements which are described in detail in Appendix L:

- Install an actuator on the existing splitter box gate to divert influent flow to the SWRF. Provide PLC programming to determine flow splitting required to equalize the peak flows.
- Install a pump system in the existing aeration basin to pump the stored influent back into the manhole onsite during low flow periods.

Alternative LT 7 will have the following associated O&M costs which are described in detail in Appendix L:

- SWRF - electric, operations staff for monitoring and maintenance.

The Capital and O&M costs for this alternative are presented in Table 51 and advantages and

disadvantages are presented in Table 52.

Table 51. Alternative LT 7 – Net Present Worth

Parameter	Cost
Capital Cost	$201,900
Annual O&M Cost[1]	$128,700
NPW of O&M Costs	$772,000
Total NPW	$973,900

(1) Annual O&M costs are the average annual O&M cost for time period 2023 to 2029.
(2) Costs derived from SWRF LT L2

Table 52. Alternative ST 7 - Advantages and Disadvantages

Advantages	Disadvantages
-Influent flow and loading is equalized	-Additional costs may outweigh benefits.

6.3. DISCUSSION ON ALUM SLUDGE

As experienced in recent years, the annual chemical costs to operate the FKC screw press have been much higher than anticipated during the design of the NWRF. In order to provide perspective how the alum sludge has affected the O&M costs at the NWRF, two additional calculations were created to show the projected hauling and chemical costs for the next 4 years. These calculations are shown in appendix Q and summarized in Tables 53 and 54 below.

Table 53. NWRF Hauling Costs

Year	With Alum[1]	Without Alum[2]	Savings
2015	233,391	70,318	163,070
2016	257,785	77,667	180,120
2017	284,728	85,785	198,940
2018	308,555	92,963	215,590

(1) Assume winter sludge can be pressed and hauled as a class A cake. Summer sludge is hauled off as liquid class B.
(2) Assume sludge can be pressed and hauled as a class A cake year round.

As shown in Table 53, there could be at least $160,000 in annual savings if the FKC screw press could operate year round to dewater the sludge without the presence of the alum sludge. This assumes all sludge is hauled offsite which may not occur long-term.

Table 54. NWRF Chemical Costs

Year	With Alum[1]	Without Alum[2]	Savings
2015	213,676	83,126	130,550
2016	234,764	91,330	143,430
2017	257,932	100,343	157,590
2018	278,041	108,166	169,880

(1) Assume sludge requires 553 lbs/DT lime and 178 lbs/DT polymer usage in winter months to produce class A sludge. Assume sludge requires 1318 lbs/DT lime in the summer months to produce class B.

(2) Assume sludge requires 300 lbs/DT lime and 40 lbs/DT polymer usage year round to produce class A sludge.

As summarized in Table 54, there is a possible savings of $130,000 per year in chemical costs if the alum sludge was not sent to the NWRF. As the sludge production increases with population growth, the chemical usage will become greater over time as shown in the above table.

7. ALTERNATIVES SUMMARY

In order to determine projected capital and O&M costs, a short term alternative must be selected with a long term alternative to account for the planning time period of this study of 2015 to 2029. Table 55 presents a summary of the alternatives.

Table 55. Alternative Summary

Short Term
Alternative 1 - SWRF and NWRF split flow and solids (NWRF produces cake)
Alternative 2 - SWRF and NWRF split flow and solids (NWRF produces liquid)
Alternative 3 - NWRF treats 1.99 MGD and produces liquid lime sludge
Alternative 4 – NWRF treats 1.99 MGD and produces cake and liquid sludge
Long Term
Alternative 1 - SWRF and NWRF split flow and solids (NWRF produces cake)
Alternative 2 - SWRF and NWRF split flow and solids (NWRF produces liquid)
Alternative 3 - NWRF treats 2.5 MGD and produces cake with FKC process
Alternative 4 - NWRF treats 2.5 MGD and produces cake from aerobic digestion
Alternative 5 - NWRF treats 2.5 MGD and produces liquid lime sludge
Alternative 6 - NWRF treats 2.5 MGD and produces cake from Schwing process
Alternative 7 - SWRF used as EQ

Table 56 presents various short-term and long-term combinations that could be selected for CIP planning. Cells that are colored grey are options that wouldn't be logical. The top value in each cell is the total capital cost, the bottom value in each cell is the total O&M net present worth, and the blue highlighted cell is the total net present worth for the option.

Table 56. Alternative Combination Cost Summary

Long Term Alternatives	Short Term Alternatives			
	Alternative ST 1	Alternative ST 2	Alternative ST 3	Alternative ST 4
Alternative LT 1	$ 5,182,100	$ 5,182,100		
	$ 29,706,700	$ 30,624,500		
	$ 34,888,800	$ 35,806,600		
Alternative LT 2	$ 5,182,100	$ 5,182,100		
	$ 30,766,900	$ 31,684,700		
	$ 35,949,000	$ 36,866,800		
Alternative LT 3	$ 4,160,700	$ 4,160,700	$ 4,240,200	$ 4,240,200
	$ 24,169,100	$ 26,354,000	$ 20,186,300	$ 18,474,900
	$ 28,329,800	$ 30,514,700	$ 24,426,500	$ 22,715,100
Alternative LT 4	$ 6,179,400	$ 6,179,400	$ 6,258,900	$ 6,258,900
	$ 25,731,200	$ 26,649,000	$ 20,481,300	$ 18,770,000
	$ 31,910,600	$ 32,828,400	$ 26,740,200	$ 25,028,900
Alternative LT 5	$ 3,147,700	$ 3,147,700	$ 3,227,300	$ 3,227,300
	$ 26,769,000	$ 27,686,900	$ 21,519,100	$ 19,807,800
	$ 29,916,700	$ 30,834,600	$ 24,746,400	$ 23,035,100
Alternative LT 6	$ 4,727,700	$ 4,727,700	$ 4,807,300	$ 4,807,300
	$ 26,447,700	$ 27,365,500	$ 21,197,800	$ 19,486,400
	$ 31,175,400	$ 32,093,200	$ 26,005,100	$ 24,293,700

Based on the results shown above, the most cost effective option is Short Term Alternative 4 and Long Term Alternative 3 which expands the existing liquid and solid stream infrastructure at the NWRF. This assumes the water treatment plant (WTP) alum sludge is no longer sent to the WRF after 2018 which greatly reduces the lime and polymer costs.

8. CAPITAL IMPROVEMENTS PLAN

In order for the Town to plan for the future improvements described in the selected Short Term 4 and Long Term 3 alternatives, this section provides a Capital Improvements Plan (CIP) that can be integrated into the Town's planning CIP. As described above in the alternatives discussion, there will be a need for an improvements project in the next year to increase the NWRF capacity to 1.99 MGD and 5372 lbs BOD/day. The second project would be accomplished in year 2023 to bring the NWRF capacity to 2.5 MGD and 6798 lbs BOD/day. As described in chapter 3, the Town of Erie's population growth is assumed to be 6% per year through 2017 and then 4% per year for every year thereafter. This population growth estimate was adopted in the Town's Comprehensive Plan in 2005 and is assumed to still be accurate for planning purposes. However, the high level of development within the Town of Erie wastewater service area will require the Town to more frequently monitor growth and compare with projected growth rates. The timing of costs presented in the CIP may need to be adjusted depending on actual growth.

Table 57 presents as summary of the capital costs for the proposed improvements.

Table 57. Capital Improvements Schedule

Description	Notes	2015	2016	2017	2018	2019	2020	2021	2022	2023	2024	2025	2026	2027	2028	2029
Projected Influent Flow (mgd)		**1.31**	**1.48**	**1.57**	**1.63**	**1.69**	**1.76**	**1.83**	**1.90**	**1.98**	**2.06**	**2.14**	**2.23**	**2.32**	**2.41**	**2.51**
Projected Influent BOD (ppd)		**3565**	**4005**	**4246**	**4416**	**4592**	**4776**	**4967**	**5166**	**5372**	**5587**	**5811**	**6043**	**6285**	**6536**	**6798**
Facility Capacity (mgd)		**1.5**	**1.99**	**1.99**	**1.99**	**1.99**	**1.99**	**1.99**	**1.99**	**1.99**	**2.5**	**2.5**	**2.5**	**2.5**	**2.5**	**2.5**
Facility Capacity BOD (ppd)		**3223**	**5372**	**5372**	**5372**	**5372**	**5372**	**5372**	**5372**	**5372**	**6798**	**6798**	**6798**	**6798**	**6798**	**6798**
NWRF – Short Term Increase treatment capacity to 1.99MGD and 5372 lbs BOD/day. Liquid and Solids Handling Improvements for influent flow and BOD load**.**																
• Upgrade Headworks	Upgrades include grit system, and 4th influent pump	**$ 44k**	**$ 40k**													
• Upgrade Secondary Treatment	Upgrades include new blower, new IR pump, re-sheave RAS pump, mixers in swing tanks, and new IFAS media	**$ 841k**	**$ 771k**													
• Upgrade Solids Treatment	Upgrades include sludge load out station, RDT to thicken WAS, mixers in feed tanks, and decanters in feed tanks	**$ 235k**	**$ 215k**													
NWRF – Long Term Increase treatment capacity to 2.5MGD and 6,798 lbs BOD/day. Liquid and Solids Handling Improvements for influent BOD load																
• Upgrade Headworks	Upgrades include new influent screen							**$ 47**	**$ 156k**	**$ 156k**						
• Upgrade Secondary Treatment	Upgrades include new RAS pump, system to split RAS and IR flows							**$ 37**	**$ 123k**	**$ 123k**						
• Upgrade Solids Treatment	Upgrades include new FKC screw press system							**$ 126**	**$ 663k**	**$ 663k**						
	Total	**$1,120k**	**$1,026k**	**$0**	**$0**	**$0**	**$0**	**$ 210**	**$ 942**	**$ 942k**	**$0**	**$0**	**$0**	**$0**	**$0**	**$0**
	Grand Total	**$4,240,200**														

9. FUNDING ANALYSIS

This section provides a general overview and comparison of funding options available to the Town of Erie (the Town) through state and federal programs designed to support wastewater infrastructure improvements. A preliminary review of available options was conducted using Town background information to identify which options are available for funding Town projects. Available options are described in detail including program background information, basic program criteria and typical application schedules.

9.1. BACKGROUND INFORMATION

The following presents a brief summary of relevant Town information that was used to evaluate eligibility for state and federal financing programs.

- Erie is a statutory town within Weld and Boulder counties.
- The Town's estimated service population is 18,135 per the 2010 US Census.
- Estimated Median Household Income (MHI) figures were $103,698 according to the 2007-2011 American Community Survey. The Town's MHI is 180% of the statewide average of $57,685.
- Monthly residential user rates for wastewater are currently set at a base rate of $15.68/month per residence or commercial establishment. In addition to the base charge there is a usage charge of $8.20/1,000 gallons. This new rate structure was adopted in 2008 and is being implemented over a 5-year period. Currently, the rate structure results in an average monthly bill for wastewater of $56.68. This charge is 265% of the 2014 statewide average user rate of $21.42/month, as determined by the Department of Local Affairs (DOLA).
- For purposes of this analysis project funding needs are assumed to range from $100,000 to $1,000,000.
- The Town has a separate enterprise fund for their wastewater services. Revenues to the Sanitation Fund are comprised of user fees, tap fees, and interest income. At the start of calendar year 2014 the Wastewater Fund contained a $7,669,346 working capital balance. In general, the Town should retain a portion of their reserves for an O&M reserve equal to three to six months of O&M costs; currently estimated at $330,250 to $660,500 annually; as well as a debt service reserve equal to 1.20 times their annual debt payment, or $1,841,520. This results in a range of $5,497,576 - $5,167,326 of the current reserve being potentially available to be used as leverage in an improvements project's funding strategy.
- Debt on the wastewater system is comprised of a four loans through the Colorado Water Resources and Power Development Authority, with origination dates ranging from 1997 to 2009, as well as three bond offerings from 2008 and 2009. The total annual debt service projected for 2014 is $1,534,600.

9.2. FUNDING ELIGIBILITY

Based on a general review of the background information for state and federal loan/grant

programs, the following items summarize the Town's eligibility for various programs. Additional detailed information is presented in the following paragraphs related to those funding sources for which the Town is currently eligible.

- The Town has one project currently listed on the Water Pollution Control Revolving Fund (WPCRF) 2014 Project Eligibility List, Appendix A:
    - Project #140040W for $67,653,000 to be used for "Improvement/Expansion of Wastewater Treatment Facilities; Improvement/New Biosolids Handling Facility; Reuse Facility; Collection System and/or Interceptor Construction or Rehabilitation."

  This project is not listed on the WPCRF 2014 Projected Loans List, Appendix B, indicating that the Town has not communicated a desire to the CDPHE to close a WPCRF loan for a project during 2014.
- The Town does not qualify for "disadvantaged community" status based on MHI.
- In addition, the Town does not qualify for a USDA Rural Utility Services loan due to their population exceeding 10,000.
- The Town is not eligible to apply for a $10,000 CDPHE Pre-loan Planning/Design Assistance grant based on their MHI exceeding 80% of the statewide MHI.
- The Town is not currently eligible for a Nutrients Management Grant because, with a treatment capacity of less than 2 million gallons per day, the wastewater treatment facility is not subject to section 85.5(1) (a) (iii) until May 31, 2022, known as delayed implementation.
- The Town may be eligible for a Water Quality Improvement Fund/Small Communities Grant. However, the Water Quality Control Commission is currently involved in the rulemaking process for these programs and is seeking an appropriation from the Colorado General Assembly. It is expected that proposed rules will be available for public comment in May 2014 at which time the amount of any appropriations will be known. The application period is expected to open in July 2014. Therefore, we will need to monitor these opportunities and alert the Town if they qualify as a grant applicant and if grant funds are appropriated.
- The Town is not currently eligible for a Natural Disaster Recovery grant, as the wastewater treatment system was not impacted, damaged or destroyed by the flood of 2013.
- As a project within an area/county experiencing mineral development the Town is eligible for Energy & Mineral Impact (EMI) grants through the DOLA. This option is discussed in more detail below.
- These three major funding options; WPCRF, and DOLA-EMI, are briefly summarized on the attached Table 1. Each is discussed in more detail below.

9.3. WATER POLLUTION CONTROL REVOLVING FUNDS (WPCRF)

Assuming that the Town finances less than $12MM of the project costs, the loan funding vehicle offered by the CDPHE and the Colorado Water Resources and Power Development Authority (the Authority) would be a direct loan. A Direct loan is funded through the EPA's annual capitalization grant that is received by the CDPHE or from the repayment proceeds of previous

loans within the program. Direct loans closed during 2014 will carry a standard interest rate of 2 percent. The interest rate and administrative fee for new loans is evaluated every December and set for the following year. Therefore, loans closed in 2015 may have a different interest rate. Reduced interest rates or principal forgiveness (essentially a grant) are available to certain qualifying communities and/or projects, as described in more detail below.

Direct loans require:

- Semi-annual payments, typically commencing 6 months following loan closing,
- 20 year terms,
- Demonstration of the ability to repay the loan. Since this would be an additional loan the applicable debt service ratio will increase to 1.20 percent,
- Demonstration that the Town is in compliance with regards to TABOR,
- Demonstration of a minimum 25% O&M reserve,
- Favorable General Counsel and Bond Counsel opinion letters prior to loan closing,
- Administrative fees, and
- Compliance with federal Davis-Bacon wage requirements, and Buy- American requirements on steel and preformed concrete.

The application deadline for October 2014 loan decisions is September 15, 2014. Many engineering approvals must be submitted and reviewed prior to submittal of the loan application. The CDPHE prefers to receive engineering and design documents several months ahead of the loan application timeframe.

Once the loan is closed, the funds are immediately available on a monthly pay requisition/reimbursement basis with receipts. Engineering and design costs incurred by the loan recipient prior to loan closing can be reimbursed after closing.

The CDPHE adopted new policy guidance in 2010 that established a “Green Project Reserve” (GPR) whereby 20 percent of annual financial assistance be directed to projects with qualifying “green components”. Projects funded through the GPR receive a reduced interest rate, currently set at 0 percent. In order to be classified as a GPR project 20 percent of the entire project cost must be demonstrated to fit the CDPHE’s criteria concerning Green Infrastructure, Energy Efficiency, Water Efficiency, or Environmental Innovation. In addition, “green” project components receive higher priority points during overall project ranking. This becomes important during those years when the demand for WPCRF loan funds outstrips availability. The Town’s current project description in the 2014 Project Eligibility List does not reflect the inclusion of any “green” project components. However, it is possible that the project to be undertaken would have components that could be considered “green”. Since inclusion and identification of such components would garner a more advantageous loan interest rate and improve project ranking it is highly recommended that green components be identified and included. Erie will have an opportunity to amend their IUP listing to include “green” components through the annual Eligibility Survey conducted by the CDPHE in the spring. Year 2014 surveys will be conducted entirely online and should be available in May with a due date of June 30, 2014. The intention of the Town to include green components in their wastewater treatment facility improvements can be indicated at that time.

The approved loan package can also include a loan forgiveness component. This component is essentially a grant and does not have to be repaid by the community. During recent years the total amount of principal forgiveness that the CDPHE had available was approximately $400,000 in FY 2013. Each project that is offered principal forgiveness cannot receive more than half of the total available and actual amounts offered depend on the total amount available and the number of loan applicants who qualify. Applicants seeking consideration for principal forgiveness as a component of their WPCRF funding package must apply on September 15th. Applicants are determined to qualify for principal forgiveness if they garner more than 130 points in the Prioritization Criteria contained in Table 1 of the IUP (pages 8 and 9).

9.4. ENERGY AND MINERAL IMPACT ASSISTANCE FUNDS (EMI)

In recently past years all severance tax proceeds normally available to the Department of Local Affairs (DOLA) for distribution as Energy and Mineral Impact grants were appropriated by the Colorado General Assembly in order to address the significant budgetary shortfalls that Colorado was experiencing during the 2008-2012 recession. Starting in 2013 DOLA's severance tax proceeds remained with the agency and were again available to fund qualifying grant applications. The outlook for availability of those funds in 2014 is very good. Erie, situated in Weld County which has a very high energy impact rating according to DOLA, may be a strong contender for Energy and Mineral Impact assistance funds.

Assuming that the total cost for the project is $1MM, and Town cash and/or WPCRF loan proceeds are available to match DOLA funds, the Town could seek grant funding from the Energy and Mineral Impact Assistance fund for roughly 50 percent of design and/or construction expenses. Recent DOLA-EMI funding decisions show that other communities have received significant funding, $1MM or less, for water and wastewater projects.

A Tier I application could yield up to $200K to fund design and engineering. This level of grant funding requires only DOLA staff recommendation followed by the Executive Director's decision, typically within two months of application. Although the entire project cost is estimated to be $1MM, discrete smaller portions of the project with specific deliverables, such as PERs, PDRs, Site and other regulatory submittals, would lend themselves to a Tier I grant application. A 50 percent local match is preferred in order to make the application competitive.

A Tier II grant application could yield up to $2MM and thereby fund final design, engineering and a portion of construction. This level of funding requires a hearing before the Energy Impact Advisory Committee, followed by a decision of the Executive Director. The hearing takes place three months following the application deadline in various locations around the state. The final decision is made in the month following the hearing. This application also prefers a 50 percent local match, which could be accomplished with either cash on hand, or the proceeds of a WPCRF loan.

10. WATER TREATMENT PLANT PILOT STUDY

As described in chapter 3, the alum sludge from the water treatment plant has been found to negatively impact the solids lime stabilization process at the NWRF. This Report has made the assumption that the Town will begin handling the alum sludge at the water treatment plant in 2018 and thereafter. The validity of this assumption was going to be verified during the summer of 2014 when a screw press pilot was planned to be set up at the water treatment facility to dewater all alum sludge and therefore prevent alum sludge from flowing to the NWRF. This pilot study would have helped the Town understand how the screw press would operate dewatering alum sludge as well as how the NWRF would operate without alum sludge.

However, once set up and operation costs were defined at approximately $100,000 for one month, the Town decided the investment in the pilot study was cost-prohibitive and no further work or investigation was done to look at using a screw press to dewater the alum sludge.

As an alternative to removing the alum sludge at the WTP, the Town switched to using Poly Aluminum Chloride (PAC) instead of Alum for a couple weeks in September of 2014 to identify any improvements on the solids process at the NWRF. The results seemed to show some improvement as the solids process became more stable during the month of September. However, the water production and corresponding total sludge production was less than what is produced during the summer months when the alum sludge has the greatest negative effect on the solids process.

11. NWRF PILOT STUDY

The NWRF solids process was designed to use approximately 300 lbs of lime per dry ton of sludge in order to stabilize the solids. However, during the summer months when the water production and corresponding alum sludge is at its peak production, the NWRF solids process required approximately 1,300 lbs lime per dry ton. The excessive lime usage causes downstream issues with lime scaling in the screw press and filtrate piping requiring further operator intervention to acid wash equipment and jet pipes. As a result of frequent screw press acid washing, the screen around the drum became corroded and ultimately failed. Figures 5 and 6 show the damage to the stainless steel screw press screen as of September 2014.

Figure 5. Screw Press Screen Corrosion

Figure 6. Screw Press Screen Failure

During the summer months of 2014, the Town contracted with Dave Sanders who is a regional expert with water treatment chemistry to understand how the lime sludge from the WTP was affecting the solids process at the NWRF to see if the lime dose could be reduced. As a result of his work, he identified the high lime dose was a result of the high amount of alum sludge and that calcium hydroxide is produced as the by-product ion when the alum sludge was mixed with lime. The presence of this ion causes the higher polymer usage.

With this data the Town began bench scale testing to see if sodium hydroxide could be used as a substitute for lime to reduce the calcium hydroxide produced and ultimately reduce the polymer used. The bench scale testing showed some improvement in dewater-ability with sodium hydroxide and lime used together. Less lime had to be used when sodium hydroxide was used.

Based on the bench scale testing, the Town conducted a full scale pilot study using sodium hydroxide and lime. In addition the Town experimented with dosing sulfuric acid to the screw press feed tanks to decrease the pH to below 9.5 prior to dewatering. By decreasing the pH prior to polymer injection, the polymer requirements were decreased by approximately 35% from the polymer use with sludge at a pH of 12. As a result of this testing, the Town saw a reduction in the lime scaling on the press due to the lower pH sludge. The Town considers the use of sulfuric acid something that would ultimately be incorporated into the process during a future project.

12. RECOMMENDED PROJECT

The recommended project is to upgrade the NWRF liquid and solids stream processes per the Short Term 4 and Long Term 3 alternatives and decommission or re-purpose the SWRF. In addition, it is recommended the Town prepare for installing a sludge dewatering system at the WTP to allow all alum sludge to be removed from the waste stream to the NWRF to decrease the NWRF dewatering chemical costs and improve the dewatering process stability.

The short term project will include the following associated capital improvements which are described in detail in Appendix K:

- Install fourth influent pump. upgrade grit system, install mixers in second IFAS tanks (swing tanks), install second IR pump, resheave existing RAS pumps to have 2000 gpm output, install third blower, and install additional Kruger IFAS media.
- Construct a sludge load out system at the NWRF including new pump in pump gallery, piping to a load out station, and electrical work to operate the pumps.
- Install floating decanters in Lime Tank and Feed Tanks.
- Install Sulfuric acid storage and pump system.

The medium term project will include the following associated capital improvements:

- Install an alum sludge dewatering system at the Erie WTP in 2018.

The long term project will include the following associated capital improvements which are described in detail in Appendix L:

- Install new RAS pump, Modify RAS pipe to split RAS flow
- Install second influent band screen
- Install second FKC screw press and associated systems to increase solids treatment capacity.

Erie North WRF

Date	1101 Inf pH Lab mg/L	4242 Split Box pH mg/L	13091 Eff pH Lab mg/L	13122 Eff Ammonia Grab mg/L	1061 Inf Ammonia, Total N mg/L	13121 Eff Ammonia, total N mg/L	42081 Effluent Turbidity AM ntu	4282 Split Box 5 Min Settlometer mg/L	4283 Split Box 30 Min Settlometer mg/L	4284 Split Box 60 Min Settlometer mg/L	1001 Inf Total Flow MGD	13001 Eff Total Flow MGD	42012 Inf Plant Recycle Flow MGD	7001 RAS Flow MGD	RAS Return Rate Q	7002 WAS Flow MGD	42021 Aeration Internal Recycle Flow MGD	Internal Recyle Rate Q	42083 Effluent PO4 mg/l	13141 Eff Nitrate mg/L	1044 Split Box TSS mg/L	4651 Split Box Sludge Volume Index ml/g	7011 RAS Suspended Solids MG/L	9132 Inf % VS %	42051 Inf VSS mg/L	1041 Inf TSS mg/L	13041 Eff TSS mg/L	1011 Inf BOD mg/l	13011 Eff BOD mg/L	Inf TSS lbs	Inf BOD lbs	Inf NH3 lbs
11/30/2011	8.37	6.99	7.24	0.18	26.74	0.16	#DIV/0!	910	604	495	1.13	1.19	0.00	0.97	0.86	0.03	1.26	1.12	#DIV/0!	#DIV/0!	4630	#DIV/0!	8383	91	400	441.70	3.70	254.13	2.00	4037	2341	244
12/31/2011	8.57	7.02	7.21	0.22	35.01	0.15	#DIV/0!	878	535	439	1.04	1.20	0.09	0.98	0.94	0.04	1.28	1.23	#DIV/0!	#DIV/0!	4411	#DIV/0!	8577	93	394	400.30	4.08	268.04	2.67	3443	2314	300
1/31/2012	8.60	6.97	7.14	0.22	32.49	0.04	#DIV/0!	844	483	410	1.07	1.15	0.11	0.94	0.88	0.04	1.28	1.20	#DIV/0!	#DIV/0!	4198	#DIV/0!	7595	93	368	394.93	5.21	282.73	4.62	3440	2468	283
2/29/2012	8.40	6.94	7.16	0.06	31.22	0.06	#DIV/0!	811	468	397	1.01	1.11	0.12	0.90	0.89	0.03	1.36	1.34	#DIV/0!	#DIV/0!	4078	#DIV/0!	7366	95	373	390.08	5.38	283.31	4.84	3190	2316	255
3/31/2012	8.39	6.96	7.17	0.26	36.27	0.19	#DIV/0!	842	480	412	1.04	1.15	0.10	0.86	0.82	0.03	1.43	1.37	#DIV/0!	#DIV/0!	3956	#DIV/0!	6944	90	340	384.79	5.49	290.81	5.76	3224	2441	306
4/30/2012	8.81	7.10	7.25	1.17	33.86	0.75	#DIV/0!	814	466	392	1.07	1.20	0.13	0.72	0.67	0.09	1.48	1.38	#DIV/0!	#DIV/0!	3801	#DIV/0!	7924	76	361	417.42	6.83	283.48	6.75	3580	2434	291
5/31/2012	8.62	7.13	7.26	0.62	35.30	0.75	#DIV/0!	622	352	322	1.14	1.31	0.12	0.74	0.65	0.05	1.39	1.22	#DIV/0!	#DIV/0!	3215	#DIV/0!	7619	83	343	408.67	5.44	255.32	4.89	3775	2360	328
6/30/2012	8.76	7.16	7.28	0.19	33.23	0.31	#DIV/0!	512	290	275	1.13	1.37	1.57	0.69	0.61	0.05	1.65	1.46	#DIV/0!	#DIV/0!	2872	#DIV/0!	6292	88	362	411.96	5.27	252.37	3.99	3887	2381	315
7/31/2012	8.74	7.22	7.32	0.26	32.92	0.29	#DIV/0!	425	247	240	1.16	1.32	0.05	0.75	0.65	0.06	2.49	2.15	#DIV/0!	#DIV/0!	2631	#DIV/0!	4853	84	353	422.10	2.73	289.54	3.90	3997	2719	312
8/31/2012	8.47	7.18	7.26	0.18	36.02	0.10	#DIV/0!	367	228	219	1.05	1.14	0.08	0.74	0.71	0.07	2.68	2.56	#DIV/0!	#DIV/0!	2555	#DIV/0!	6940	82	396	481.01	2.17	313.75	4.29	4165	2722	313
9/30/2012	8.67	7.23	7.40	0.13	36.42	0.09	#DIV/0!	358	221	210	1.08	1.15	0.10	0.63	0.58	0.06	2.65	2.45	#DIV/0!	#DIV/0!	2840	#DIV/0!	8413	86	401	468.45	1.91	289.75	4.70	4144	2561	322
10/31/2012	8.87	7.26	7.38	0.23	37.99	0.18	#DIV/0!	287	192	184	1.08	1.24	0.12	0.60	0.56	0.06	2.56	2.37	#DIV/0!	#DIV/0!	2403	#DIV/0!	7271	88	365	420.68	1.45	278.60	3.36	3633	2428	328
11/30/2012	8.84	7.15	7.32	0.26	39.74	0.19	#DIV/0!	336	202	196	1.05	1.13	0.09	0.40	0.38	0.05	2.58	2.46	#DIV/0!	#DIV/0!	2054	#DIV/0!	9179	90	319	351.27	1.84	285.80	3.14	2976	2426	337
12/30/2012	8.94	7.13	7.28	0.59	36.60	0.17	1.33	365	214	210	1.06	1.11	0.10	0.40	0.38	0.07	2.49	2.36	0.51	7.20	2000	107		88	297	338.38	2.00	318.14	3.16	2874	2706	308
Average	8.68	7.12	7.27	0.35	35.17	0.26	#DIV/0!	549	320	289	1.08	1.20	0.22	0.70	0.65	0.06	2.00	1.86	#DIV/0!	#DIV/0!	3050	#DIV/0!	7309	87	356	407.48	3.81	285	4.45	3574	2497	308
1/31/2013	8.63	7.11	7.18	1.75	33.25	1.24	1.90	531	278	275	1.07	1.17	0.12	0.53	0.50	0.05	2.07	1.94	0.29	8.27	2107	132	7607	94	327	349.50	3.40	358.79	4.50	3047	3139	290
2/28/2013	8.96	6.85	6.95	1.08	33.09	0.83	1.59	395	216	215	1.09	1.18	0.11	0.47	0.43	0.06	2.13	1.96	0.27	7.44	1811	119	7761	93	322	301.68	2.95	333.38	3.85	2915	2927	292
3/31/2013	9.42	6.95	6.98	0.90	33.25	0.38	1.20	557	267	242	1.11	1.21	0.11	0.59	0.53	0.06	3.93	3.54	0.25	6.80	1900	139	6005	91	278	304.88	2.38	299.63	3.25	2669	2622	290
4/30/2013	9.01	6.72	6.93	0.81	31.01	0.15	1.47	661	321	455	1.17	1.25	0.18	0.64	0.55	0.06	2.01	1.73	0.23	7.10	2146	150	6490	88	299	320.59	2.74	291.96	2.53	3060	2770	294
5/31/2013	8.85	6.74	6.95	1.31	35.73	0.35	1.00	686	331	399	1.18	1.30	0.19	0.68	0.58	0.06	1.57	1.33	0.18	8.44	2242	147	7229	88	310	349.44	1.78	278.33	2.11	3418	2728	351
6/30/2013	8.69	6.72	6.90	0.83	32.85	0.77	2.03	556	293	559	1.24	1.37	0.21	0.68	0.55	0.06	1.78	1.44	0.14	7.65	2332	126	7533	82	364	447.83	3.53	268.26	2.90	4561	2725	334
7/31/2013	7.83	6.90	6.96	0.33	36.15	0.47	3.53	489	268	298	1.14	1.30	0.24	0.55	0.48	0.05	1.80	1.58	0.31	7.88	2765	97	9712	82	372	455.60	7.60	249.70	4.60	4338	2367	341
8/31/2013	7.35	6.89	6.92	0.17	41.56	0.20	2.13	436	248	257	1.12	1.34	0.26	0.53	0.47	0.05	1.80	1.60	0.27	7.75	2982	84	11038	81	350	442.00	3.25	250.88	2.38	4057	2304	381
9/30/2013	7.45	6.89	7.01	0.27	35.44	0.18	7.74	511	279	249	1.51	1.66	0.28	0.71	0.47	0.05	1.80	1.19	0.30	7.45	4682	66	17246	68	348	492.11	4.25	246.54	2.71	5616	2681	377
10/31/2013	7.74	6.71	6.87	0.11	37.16	0.17	1.19	461	259	243	1.15	1.36	0.28	0.63	0.55	0.06	1.80	1.56	0.28	7.24	2867	91	10030	81	292	349.70	2.80	294.50	3.00	3304	2777	349
11/30/2013	8.57	6.77	6.85	0.34	39.94	0.28	1.95	547	297	368	1.15	1.33	0.28	0.58	0.50	0.04	1.79	1.56	0.26	7.09	2498	119	9387	88	293	333.30	3.53	318.83	3.78	3138	3004	375
12/31/2013	7.79	6.46	6.66	0.35	39.31	0.89	3.56	679	335	315	1.13	1.33	0.27	0.51	0.45	0.04	1.80	1.59	0.75	6.33	2680	125	10635	91	284	309.67	6.67	321.33	5.33	2884	2995	367
Average	8.36	6.81	6.93	0.69	35.73	0.49	2.44	543	283	323	1.17	1.32	0.21	0.59	0.51	0.05	2.02	1.73	0.29	7.45	2584	116	9223	85	320	371.36	3.74	293	3.41	3584	2753	337

THIS PAGE INTENTIONALLY LEFT BLANK

Frachetti Engineering

Erie North, CO

3/18/2014

AnoxKaldnes™ IFAS

Kruger Project No.: 5700106402

Submitted to:

Nick Worley, P.E.
Franchetti Engineering
5325 S Valentia Way
Greenwood Village, CO 80111

Submitted by:

Brad Mrdjenovich
AnoxKaldnes Applications Engineer
I Kruger Inc.
4001 Weston Parkway
Cary, NC 27513

This document is confidential and contains proprietary information.
It is not to be disclosed to a third party without the written consent of Veolia Water Solutions & Technologies

Introduction

I Kruger Inc is pleased to present this budgetary proposal for our AnoxKaldnes IFAS System. For this application, Kruger proposes upgrading the existing IFAS system. This upgrade would include moving all of the existing K3 media into IFAS Zone #1 as well as adding additional K3 media to those reactors. The cylindrical screens in IFAS Zone #2 would also be moved to IFAS zone #1.

Please note that modifications to the existing medium bubble air grids as well as additional modifications to the screens may also be required.

We appreciate the opportunity to provide this proposal to you. If you have any questions or need further information, please contact our local Representative, Brian Dieke of the Water Technology Group, or our AnoxKaldnes Product Manager, Chris Thomson, at (919)-653-4562 (chris.thomson@veolia.com).

cc: CT, DOF, project file (Kruger)
Brian Dieke (Water Technology Group)

Revision	Date	Process Eng.	Comments
0	03/11/2014	DOF, JH	Initial, budgetary proposal.

AnoxKaldnes IFAS System Configuration

For this application, Kruger proposes upgrading the existing IFAS system. This upgrade would include moving all of the existing K3 media into IFAS Zone #1 as well as adding additional K3 media to those reactors. The cylindrical screens in IFAS Zone #2 would also be moved to IFAS zone #1.

Design Summary

The proposed design is based on the following influent wastewater characteristics and incorporating peak flow conditions for screen design purposes only. The design assumes that the raw influent wastewater is biodegradable, no toxic compounds are present, sufficient alkalinity is available to avoid pH depressions, that the COD/BOD ratio is between 1.7 and 2.3, and that none of the equipment provided would be used in a classified area (e.g. Class 1, Division 1 or Class 1, Division 2).

Facilities with primary clarification will require screening with a maximum of 6 mm (1/4 inch) openings for removal of particulate matter (rags, debris, etc.) prior to entering the AnoxKaldnes IFAS treatment reactors. Facilities that lack primary clarification will require screening with a maximum of 3 mm (1/8 inch) openings.

Table 1: Influent Design Basis

Parameter	Units	Short-Term Improvements	Long-Term Improvements
Flow, Max. Month	MGD	1.99	2.5
Flow, Peak Hour	MGD	8.70*	8.70*
BOD, Max. Month	lb/d	5,365	6,788
TSS, Max. Month	lb/d	6,557	8,296
NH_3-N, Max. Month	lb/d	596	754
TP, Max. Month	lb/d	232*	292*
Elevation	ft	4,940	4,940
Min./Max. Temperature	°C	15/22*	15/22*

*Assumed values.

Table 2: Effluent Objectives

Parameter	Units	Values
TIN	mg/L	10
TP	mg/L	1*

*Chemical trimming may be required to meet this objective.

Table 3: Short-Term Improvements Process Design Summary

Parameter	Units	Values
Number of Process Trains	-	2
Number of Anaerobic Zones per Train	-	2
Number of Pre-Anoxic Zones per Train	-	2
Number of Aerobic IFAS Zones per Train	-	1
Number of Aerobic Nitrification Zones per Train	-	1
Anaerobic Zone #1		
Dimensions	ft	38.92 L × 8 W × 18 SWD
Volume (Each)	ft^3	5,604
Total Volume (All Reactors, All Trains)	ft^3	11,208
Number of Mixers Per Reactor	-	1
Total Number of Mixers (All Reactors, All Trains)	-	2
Anaerobic Zone #2		
Dimensions (Each)	ft	38.92 L × 8.5 W × 18 SWD
Volume (Each)	ft^3	5,954
Total Volume (All Reactors, All Trains)	ft^3	11,909
Number of Mixers Per Reactor	-	1
Total Number of Mixers (All Reactors, All Trains)	-	2
Pre-Anoxic Zone #1		
Dimensions (Each)	ft	38.92 L × 10.5 W × 18 SWD
Volume (Each)	ft^3	7,355
Total Volume (All Reactors, All Trains)	ft^3	14,711
Number of Mixers Per Reactor	-	1
Total Number of Mixers (All Reactors, All Trains)	-	2
Pre-Anoxic Zone #2		
Dimensions (Each)	ft	38.92 L × 10 W × 18 SWD
Volume (Each)	ft^3	7,005
Total Volume (All Reactors, All Trains)	ft^3	14,010
Number of Mixers Per Reactor	-	1

Parameter	Units	Values
Total Number of Mixers (All Reactors, All Trains)	-	2
IFAS Zone		
Dimensions (Each)	ft	38.92 L × 34.25 W × 18 SWD
Volume (Each)	ft^3	23,992
Total Volume (All Reactors, All Trains)	ft^3	47,984
Media Type:	-	K3
Fill of Biofilm Carriers	%	65
Existing Media Volume (K3)	ft^3	17,905
Additional Media Volume (K3)	ft^3	13,309
Total Media Volume (All Reactors, All Trains)	ft^3	31,214
Aeration System Type	-	Medium Bubble
Total Process Air Requirement (All Reactors, All Trains)	SCFM	3,759
Total Mixing Air Requirement (All Reactors, All Trains)	SCFM	1,066
Discharge Pressure (From Top of Drop Pipe)	psi	8.6
Aerobic Nitrification Zone		
Dimensions (Each)	ft	38.92 L × 34.25 W × 18 SWD
Volume (Each)	ft^3	23,992
Total Volume (All Reactors, All Trains)	ft^3	47,984
Aeration System Type	-	Medium Bubble
Total Process Air Requirement (All Reactors, All Trains)	SCFM	629
Total Mixing Air Requirement (All Reactors, All Trains)	SCFM	400
Discharge Pressure (From Top of Drop Pipe)	psi	8.6
MLSS, Max. Month	mg/L	2,500
IMLR, Max. Month	%	400
RAS, Max. Month	%	50-100
Sludge Production, Max. Month	lb/day	4,900

Table 4: Long-Term Improvements Process Design Summary

Parameter	Units	Values
Number of Process Trains	-	2
Number of Anaerobic Zones per Train	-	2
Number of Pre-Anoxic Zones per Train	-	2
Number of Aerobic IFAS Zones per Train	-	1
Number of Aerobic Nitrification Zones per Train	-	1
Anaerobic Zone #1		
Dimensions	ft	38.92 L × 8 W × 18 SWD
Volume (Each)	ft^3	5,604
Total Volume (All Reactors, All Trains)	ft^3	11,208
Number of Mixers Per Reactor	-	1
Total Number of Mixers (All Reactors, All Trains)	-	2
Anaerobic Zone #2		
Dimensions (Each)	ft	38.92 L × 8.5 W × 18 SWD
Volume (Each)	ft^3	5,954
Total Volume (All Reactors, All Trains)	ft^3	11,909
Number of Mixers Per Reactor	-	1
Total Number of Mixers (All Reactors, All Trains)	-	2
Pre-Anoxic Zone #1		
Dimensions (Each)	ft	38.92 L × 10.5 W × 18 SWD
Volume (Each)	ft^3	7,355
Total Volume (All Reactors, All Trains)	ft^3	14,711
Number of Mixers Per Reactor	-	1
Total Number of Mixers (All Reactors, All Trains)	-	2
Pre-Anoxic Zone #2		
Dimensions (Each)	ft	38.92 L × 10 W × 18 SWD
Volume (Each)	ft^3	7,005
Total Volume (All Reactors, All Trains)	ft^3	14,010
Number of Mixers Per Reactor	-	1

Parameter	Units	Values
Total Number of Mixers (All Reactors, All Trains)	-	2
IFAS Zone		
Dimensions (Each)	ft	38.92 L × 34.25 W × 18 SWD
Volume (Each)	ft^3	23,992
Total Volume (All Reactors, All Trains)	ft^3	47,984
Media Type:	-	K3
Fill of Biofilm Carriers	%	65
Existing Media Volume (K3)	ft^3	17,905
Additional Media Volume (K3)	ft^3	13,309
Total Media Volume (All Reactors, All Trains)	ft^3	31,214
Aeration System Type	-	Medium Bubble
Total Process Air Requirement (All Reactors, All Trains)	SCFM	4,627
Total Mixing Air Requirement (All Reactors, All Trains)	SCFM	1,066
Discharge Pressure (From Top of Drop Pipe)	psi	8.6
Aerobic Nitrification Zone		
Dimensions (Each)	ft	38.92 L × 34.25 W × 18 SWD
Volume (Each)	ft^3	23,992
Total Volume (All Reactors, All Trains)	ft^3	47,984
Aeration System Type	-	Medium Bubble
Total Process Air Requirement (All Reactors, All Trains)	SCFM	876
Total Mixing Air Requirement (All Reactors, All Trains)	SCFM	400
Discharge Pressure (From Top of Drop Pipe)	psi	8.6
MLSS, Max. Month	mg/L	3,500
IMLR, Max. Month	%	400
RAS, Max. Month	%	50-100
Sludge Production, Max. Month	lb/day	6,225

Scope of Supply

Kruger is pleased to present our scope of supply which includes process engineering design, equipment procurement, and field services required for the proposed treatment system, as related to the equipment specified. The work will be performed to Kruger's high standards under the direction of a Project Manager. All matters related to the design, installation, or performance of the system shall be communicated through the Kruger representative giving the Engineer and Owner ready access to Kruger's extensive capabilities.

Process and Design Engineering

Kruger will provide process engineering and design support for the system as follows:

- Process Engineering consisting of aeration system sizing and configuration, sieve and outlet design.
- Review and approval of P&I Diagram for the AnoxKaldnes IFAS portion of the process. Preliminary General Arrangement Drawings and review and approval of final General Arrangement Drawings for the process. Review of reactor drawings with respect to penetrations and dimensions, excluding structural design.
- Equipment installation instructions for all equipment supplied by Kruger.

Field Services

Kruger will furnish a Service Engineer to perform the following tasks:

- Inspect installation of key pieces of equipment during construction.
- Inspect the completed system prior to startup.
- Assist the Contractor with initial startup of the system.
- Train the Owner's staff in the proper operation and maintenance of the AnoxKaldnes IFAS system.
- Test and start any Kruger-supplied control equipment, including PLC programming and SCADA systems.

AnoxKaldnes IFAS System Equipment – Limited to In-Basin Equipment Only

Process and Mechanical Equipment Items	Qty	Description
AnoxKaldnes K3 Media, (ft^3)	13,309	High density polyethylene carrier elements.
Air scour system	Yes	An air sparging system in 304L SS will be provided to scour the screens.
Regenerative Blowers	2	Regenerative blowers for screen air sparging. Blowers will be rated for 517 SCFM and 16.8 NPHP.

Notes Regarding System Design and Installation

- For any MBBR or IFAS system, regardless of manufacturer, the quality and finish of reactor surfaces is important for the long-term longevity of the system. AnoxKaldnes has years of experience in the design and manufacture of MBBR and IFAS systems, with the quality and texture of the finished reactor walls is important. It is particularly important to prevent chipping, holidays, or rough areas that would leave open any annular spaces around media retention screens.

Scope of Supply BY INSTALLER/PURCHASER

The contractor's scope of supply for the AnoxKaldnes IFAS system should include, but is not limited to, the following items:

- All civil/site and electrical work.
- All provisions for interconnecting piping.
- Unloading, storage and installation of equipment.
- Chemical addition systems.

Design Options

In addition to the proposed system as detailed herein, Kruger is able to further incorporate our process and controls expertise into wastewater treatment plants, allowing municipalities to meet stringent effluent requirements and future plant upgrades. Kruger is also able to offer our instrumentation and controls expertise to build upon the proposed system by providing a **customized plant-wide SCADA system** or designing a **Motor Control Center (MCC)**, providing clients a single source responsibility for plant controls. Please contact Kruger if the options above are of interest or to be included in the current proposed system or future upgrades. ***Please note that the design options listed above are not included in the pricing noted herein.*

Schedule

- Shop drawings will be submitted within 6-8 weeks of receipt of an executed contract by all parties.

- All equipment will be delivered within 18-20 weeks after receipt of written approval of the shop drawings.
- Installation manuals will be furnished upon delivery of equipment.
- Operation and Maintenance Manuals will be submitted within 90 days after receipt of approved shop drawings.

Pricing

The price for the AnoxKaldnes IFAS system, as defined herein, including process and design engineering, field services, and equipment supply is:

IFAS System upgrade: $435,000

Pricing is FOB shipping point, with freight allowed to the job site. This pricing does not include any sales or use taxes. In addition, pricing is valid for ninety (90) days from the date of issue and is subject to negotiation of a mutually acceptable contract.

Please note that the above pricing is expressly contingent upon the items in this proposal and are subject to I. Kruger Inc. Standard Terms of Sale detailed herein.

Kruger Standard Terms of Payment

The terms of payment are as follows:

- 10% on receipt of fully executed contract
- 15% on submittal of shop drawings
- 75% on the delivery of equipment to the site

Payment shall not be contingent upon receipt of funds by the Contractor from the Owner. There shall be no retention in payments due to I. Kruger Inc. All other terms per our Standard Terms of Sale are attached.

All payment terms are net 30 days from the date of invoice. Final payment not to exceed 120 days from delivery of equipment.

Erie North Plant

	Anaerobic #1	Anaerobic #2	Anoxic #1	Anoxic #2	IFAS #1	IFAS #2
Short-Term Improvements						
NH3-N Conc. (mg/L)	0.8	18.0	8.6	8.8	0.7	0.4
NO3-N Conc. (mg/L)	0.1	0.0	0.6	0.0	2.9	5.6
Ortho-P Conc. (mg/L)	0.7	11.8	5.0	6.3	2.2	0.2
DO Conc. (mg/L)	-	-	-	-	4.0	3.0
Total Process Air Requirement (scfm)	-	-	-	-	3,759	629
Long-Term Improvements						
NH3-N Conc. (mg/L)	0.9	18.1	8.7	9.0	0.8	0.5
NO3-N Conc. (mg/L)	0.0	0.0	0.7	0.0	5.3	5.6
Ortho-P Conc. (mg/L)	1.1	13.6	5.6	7.0	2.5	0.2
DO Conc. (mg/L)	-	-	-	-	4.0	3.0
Total Process Air Requirement (scfm)	-	-	-	-	4,627	876

Erie South Plant

	Anoxic	IFAS	Aerobic
NH3-N Conc. (mg/L)	7.4	1.0	0.6
NO3-N Conc. (mg/L)	0.0	6.4	6.8
DO Conc. (mg/L)	-	4.0	2.0
Total Process Air Requirement (scfm)	-	3,331	645

Nick Worley

From: Thomson, Chris
Sent: Monday, February 03, 2014 11:10 AM
To: nick@frachetti.com
Cc: Mrdjenovich, Brad; Foster, David; dieke@wtrgroup.com; bugdr1@q.com
Subject: RE: Erie
Attachments: Erie, CO 2013 Design System Profile.pdf

Nick:

Please see our responses to your questions below, along with the system profile attached.

- The media fill in each train will mainly affect the nitrification capacity. Based on the updated influent conditions, the capacity of a single IFAS train is roughly 1.43 MGD. It is doubtful that the system can be rated for 3.6 MGD based on the updated conditions. The main issue seems to be the significant increase in nitrogen loading. Based on our in-house modeling tool and BioWin simulation results, the system seems to be carbon-limited under maximum month conditions. See attached document for a nitrogen profile generated by our modeling/simulation tools. The assumed IMLR recycle is 200-300%.
- It is possible to operate the IFAS reactors below the minimum air flow rate that would be recommended to provide adequate media mixing. If this is done, it is strongly recommended that the headlosses across the screens be closely monitored in the event that media accumulates around them and causes a blockage. Interlocks in the PLC control system should be implemented such that the air flow is increased and/or IMLR rate decreased automatically in the event of a high level in the IFAS reactors. As an alternative, shifting all of the media into the first aerobic reactor may also result in the ability to run the second aerobic reactors at lower DO concentrations while maintaining full nitrification.
- See attached document for calculated process air requirements under current conditions. Based on our modeling results, the first IFAS reactors are not mixing limited but the second IFAS reactors are mixing limited. The minimum recommended air flow range for adequate media mixing is 533-773 scfm per IFAS reactor. The exact flow requirement will vary within this range depending on total forward flow through the reactor and % fill. There are other factors that will impact the air requirement, so we cannot provide an estimate at various media fill fractions.
- IFAS system operation/design can potentially be optimized by using flow equalization to reduce diurnal variations in flow/load. We will need further information on current diurnal fluctuations in order to be able to model them in BioWin. The current design is based on the maximum month flow/loads at minimum design temperature with factors of safety applied. Kruger's in-house model does not account for the impact of diurnal fluctuations on effluent quality, because those fluctuations typically do not significantly impact the 30-day average effluent concentration values.

Please let us know if you have any questions.

CT

Chris Thomson, P.E.
Product Manager, AnoxKaldnes
Kruger Inc.
4001 Weston Parkway
Cary, North Carolina 27513
919-653-4562 direct
919-677-0082 fax
919-523-9260 mobile
chris.thomson@veoliawater.com

www.krugerusa.com
www.veoliawaterstna.com
Kruger Inc. is a subsidiary of Veolia Water Solutions & Technologies

Service ● Value ● Responsibility

On 29 January 2014 14:39, Nick Worley <nick@frachetti.com> wrote:

Chris, here is the data for the north WWTF. This influent data reflects the blend of the influent wastewater and the pressate from the solids stream process. As you will see, the influent concentrations are higher than the design criteria used for the WWTF design. In reviewing the past two years worth of data, the max month loading occurs in December while the max month flows occur during the summer. For modeling purposes, please use AA concentrations from 2013 (**293 mg/l BOD, 35 mg/l Ammonia (58 mg/l TKN), 375 mg/l TSS**) and MM concentrations from December 2013 data (**320 mg/l BOD, 40 mg/l Ammonia (67 mg/l TKN), 310 mg/l TSS**). Note that TSS concentrations vary due to issues with the solids stream process and WTP alum sludge.

I also looked at some design criteria information and it looks like Burns and Mac assumed the first IFAS tank would be filled with 65% media and the second IFAS tank would be filled with 60% media. Please confirm this is acceptable.

I have also included below our updated questions for Kruger based on our conversation this morning.

- How do we understand the capacity of each train based on media fill? Please tell us the capacity of a single IFAS train (anaerobic, anoxic, IFAS 1, IFAS 2) based on the influent organic loading concentrations above. Is there any way the basis can be rated for 3.6 MGD at these updated concentrations? Please show nitrogen profile through process at AA and MM loading conditions. Also provide the assumed internal recycle rates used in the modeling.

- We are concerned about DO getting back to the anoxic tank through the internal recycle piping. Is there any way we can limit the IFAS fill volume and air supplied to the second IFAS tank and do the majority of treatment in the first tank?

- The operations staff have mentioned the duty blower is insufficiently sized to maintain the DO in the four IFAS tanks which then requires the standby blower to operate. Please provide the calculated air requirements to each IFAS tank in a single train for Average/MMDF. Are the tanks air limited or mixing limited? What minimum air flow rate is required to keep media in suspension at 20%, 40%, and 60% fill?

- Concerning the use of flow equalization, we would like you to model any optimization that would occur with shaving organic/hydraulic loading peaks. I understand your model is a steady state model (not Biowin) so please confirm whether or not the model already assumes a steady influent flow and loading throughout the day. If that is the case, then how does a typical diurnal flow and loading pattern affect the actual performance of the IFAS process? Do you de-rate the model to account for this?

THIS PAGE INTENTIONALLY LEFT BLANK

If map is not shown.

TB150-1.0S

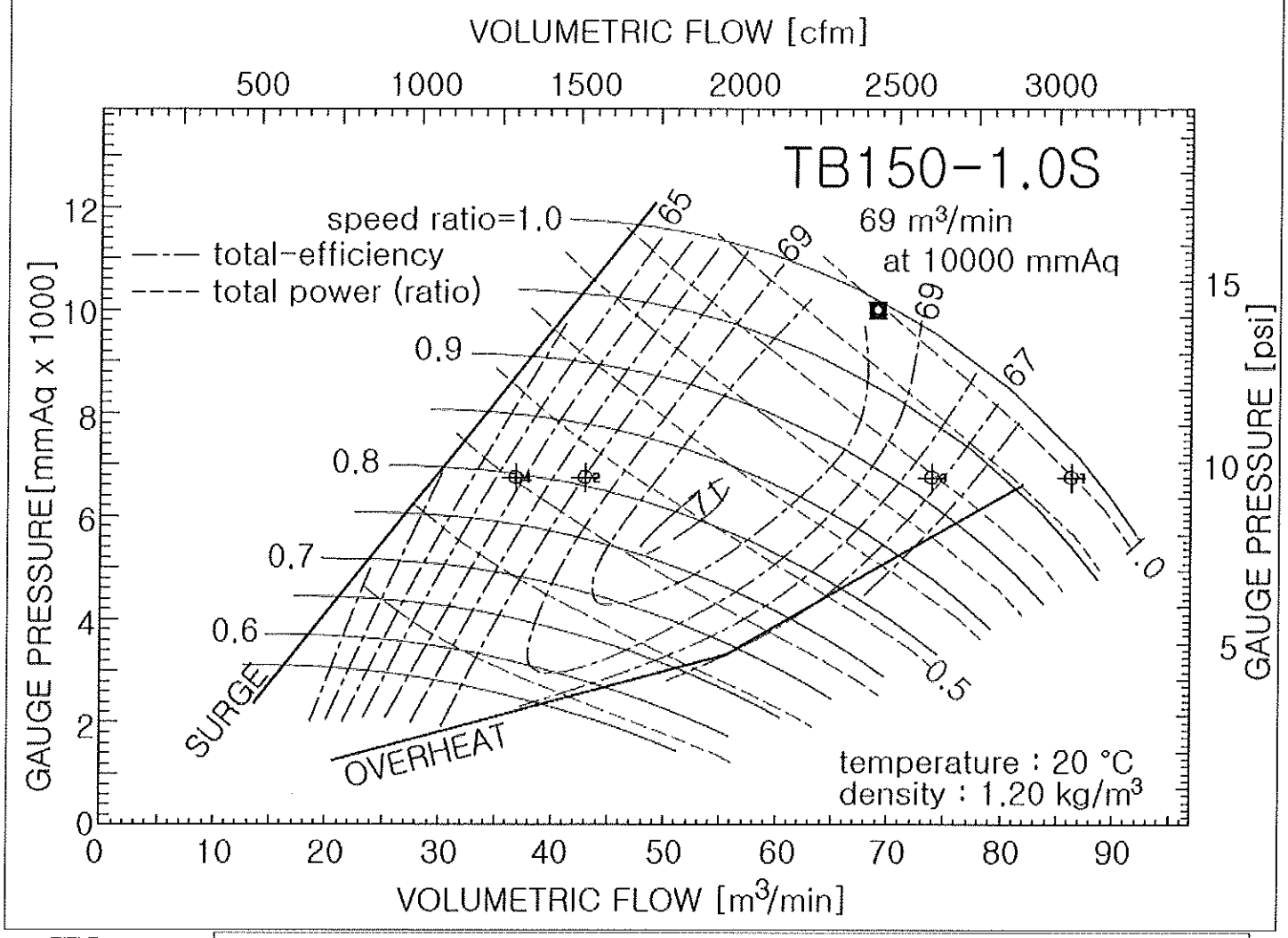

- TITLE: Erie NWRF-CO, IFAS process, Jan 12th 2009
- UNIT SYSTEM: US (ft-lb)

* Typically 0%RH or 36%RH @ 68°F(20°C), 14.696psia(101.325kPa) for USA. 65%RH @ 20°C, 101.325kPa for Japan

STANDARD CONDITION			Altitude [ft]	Ambient Pressure [psi(A)]
T_{st} [°F]	$R.H_{st}$ [%]	P_{st} [psi(A)]		
68	36	14.696	1940	13.694

COMMENT

Total 2 blowers

Save | Copy to my Account

* Built-in Filter : Fresh 0.03 psi / Dirty 0.22 psi

Pt	T_1 [°F]	R.H [%]	Q_{std} [CFM]	# of Units	$P_{2(G)}$ [psi(G)]	ΔP_{filter} [psi]		$Q_{in/unit}$ [CFM]	$Q_{act/unit}$ [CFM]	$Q_{corr/unit}$ [CFM]	Mass Flow [lbm/s]	P_{corr} [psi]	η_{total} [%]		Total Input [kW] Unit	Total	remark	Del
1	100	80	2,600	1	8.5	0.2	▶	3,107.26	3,153.31	3,061.83	3.391	9.475	64	▶	115.7	115.7		X
2	100	80	1,300	1	8.5	0.2	▶	1,553.63	1,576.65	1,530.92	1.696	9.475	68.2	▶	54.3	54.3		X
3	0	50	2,600	1	8.5	0.2	▶	2,412.32	2,448.08	2,622.91	3.273	9.475	67.2	▶	85.5	85.5		X
4	0	50	1,300	1	8.5	0.2	▶	1,206.16	1,224.04	1,311.45	1.637	9.475	65.5	▶	43.9	43.9		X
+							▶							▶				

+ : add additional line with copied data.

AERZEN USA
Corporation
108 Independence Way
Coatesville, PA 19320

www.aerzenusa.com

Appendix C

Ph/fax: (484) 288-6366/ (610) 380-0278 email: ebennett@aerzenusa.com 11-Feb-14

To: Nick Worley, P.E. **page 1 of 1** **From: Eric Bennett**
Frachetti Engineering **Aerzen Ref: E41-23074**
c/o: Mark Sampson of Water Control Corporation (303) 717-1879
Re: Erie, CO

TB150-1.0S

Weights & Dimensions:

Discharge connection	ANSI	10"
Motor cooling connection	ANSI	4"
Blower torso weight	lbs	1900
A/B Type Envelope dim.*	LxWxH in.	47X50X77

* non binding dimensions includes, discharge silencer, relief valve, check valve, and flex connector
3 ft space is required around the blower for service and maintenance.

Aerzen Turbo Blower package consists of the following components, completely assembled in our factory.

1 Aerzen Centrifugal Blower TB Series
1 bump air foil bearings
1 high speed PM motor
1 inverter
1 sound enclosure
1 PM motor cooling system
1 enclosure integrated air filtration system
1 Blow Off Valve
1 BOV silencer
1 pipe insulation
1 CPU
1 LCP (MICOM control, Touch Screen)
1 set of necessary sensors (temp and pressure)

Scope of Supply

1 compact blower package as listed above
1 passive harmonic filter (ships loose to be installed by others)
1 check valve (ships loose to be installed by others)
1 discharge silencer (ships loose to be installed by others)
1 set of spare enclosure filter elements
1 flanged flexible connector ANSI 150#, discharge
1 domestic packaging
1 freight to jobsite
1 trip, 2 days mfg onsite services (addl days $1,800/day)

TOTAL for 1 unit(s) c/o: **Mark Sampson of Water Control Corporation (303) 717-1879**

Pricing: FCA Coatesville, PA 19320, Freight allowed
Terms: This offer is subject to Aerzen Standard Terms and Conditions (A2-001-USA January 2009)
Submittals: 2-3 weeks after receipt of Purchase Order
Payment: 20% upon receipt of approved submittal, 75% upon shipment Net 30 and 5% retention not to exceed 120 days from shipment.
Delivery: presently approx. 4 months upon technical release by customer
Warranty: 24 months after start up or 30 months after delivery, which ever comes first*
*Maintenance must be performed per the Instruction Manual using Aerzen spare parts.
*Equipment not manufactured by Aerzen will carry the manufacturer's standard warranty

3 G TB150-1.0S

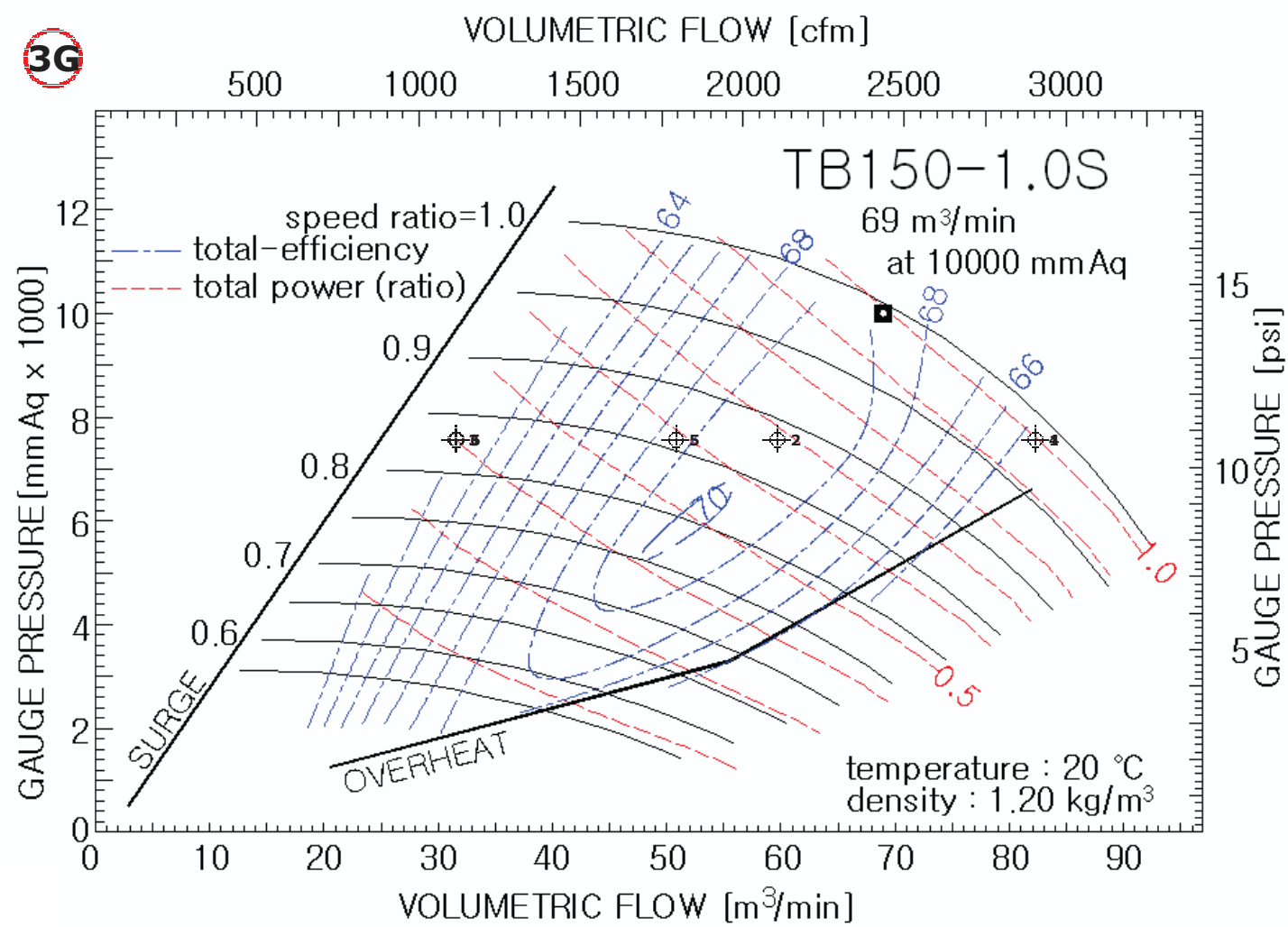

- TITLE: E41-23074
- UNIT SYSTEM: US (ft-lb)

* Typically 0%RH or 36%RH @ 68°F(20°C), 14.696psia(101.325kPa) for USA. 65%RH @ 20°C, 101.325kPa for Japan

STANDARD CONDITION				
T_{st} [°F]	$R.H_{st}$ [%]	P_{st} [psi(A)]	Altitude [ft]	Ambient Pressure [psi(A)]
68	36	14.696	4945	12.253

COMMENT

Save | Copy to my Account

* Built-in Filter : Fresh 0.03 psi / Dirty 0.22 psi

Pt	T_1 [°F]	R.H [%]	Q_{std} [CFM]	# of Units	$P_{2(G)}$ [psi(G)]	$\triangle P_{filter}$ [psi]		$Q_{in/unit}$ [CFM]	$Q_{act/unit}$ [CFM]	$Q_{corr/unit}$ [CFM]	Mass Flow [lbm/s]	P_{corr} [psi]	η_{total} [%]		Total Input [kW] Unit	Total	remark	Del
1	100	80	2,200	1	8.5	0.2	▶	2,959.01	3,008.11	2,920.84	2.887	10.608	64	▶	108.4	108.4	MAX SUMMER	X
2	100	80	1,600	1	8.5	0.2	▶	2,152	2,187.71	2,124.25	2.099	10.608	69	▶	73.1	73.1		X
3	100	80	850	1	8.5	0.2	▶	1,143.25	1,162.22	1,128.51	1.115	10.608	62	▶	43.2	43.2	MIN SUMMER	X
4	0	50	2,585	1	8.5	0.2	▶	2,680.83	2,725.32	2,919.95	3.260	10.608	64	▶	98.2	98.2	MAX WINTER	X
5	0	50	1,600	1	8.5	0.2	▶	1,659.32	1,686.85	1,807.32	2.018	10.608	68	▶	57.2	57.2		X
6	0	50	1,000	1	8.5	0.2	▶	1,037.07	1,054.28	1,129.57	1.261	10.608	62	▶	39.2	39.2	MIN WINTER	X

Appendix C

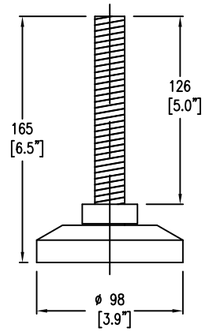

ADJUSTABLE FOOTING

PLAN VIEW

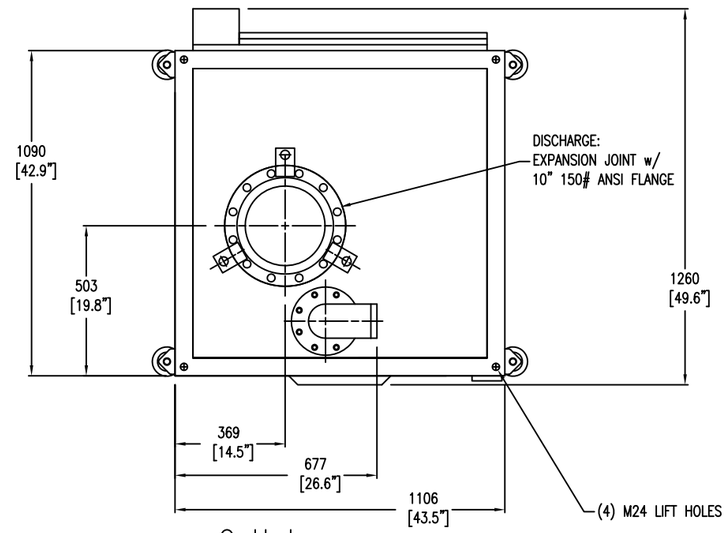

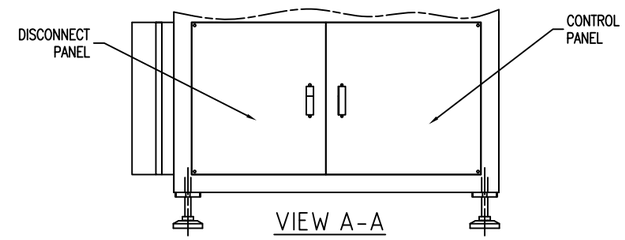

VIEW A-A

NOTES

1. TOLERANCE ON DIMENSIONS = ±12mm [0.5"]
2. WEIGHT: BLOWER PACKAGE WEIGHT 972 Kg. (2138 Lbs.)
3. CUSTOMER PIPING TO BE INDEPENDENTLY SUPPORTED
4. LIFTING OF PACKAGE: WITH FORKLIFT, OR VIA (4) EYEBOLTS, ONE IN EACH CORNER OF THE TOP OF THE MACHINE
5. ALLOW APPROX. 915mm [36"] FREE SPACE FOR MAINTENANCE ON ALL FOUR SIDES

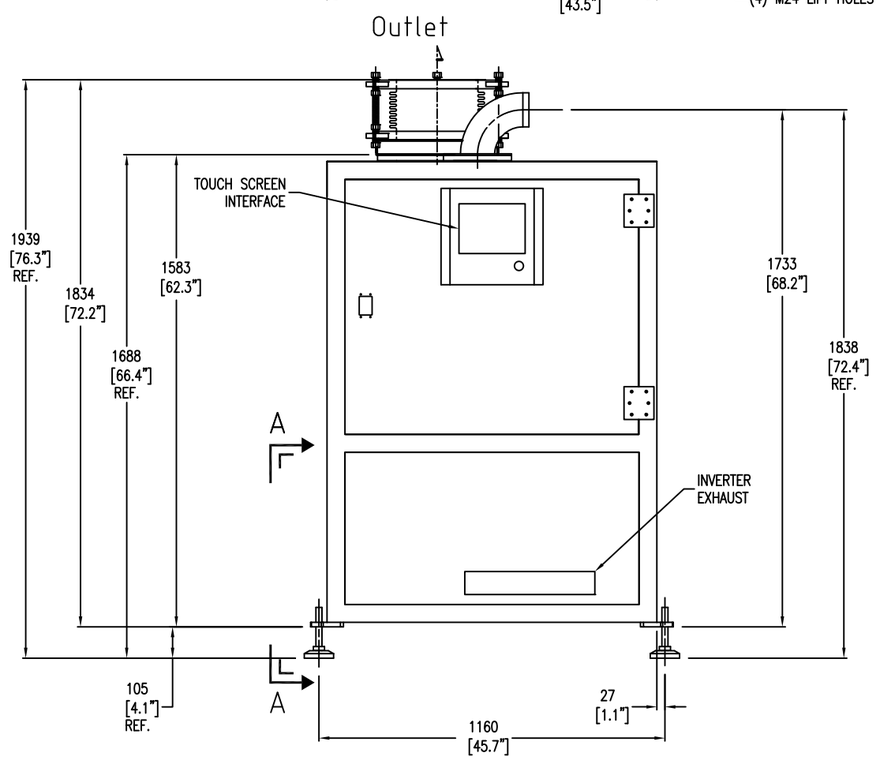

FRONT VIEW

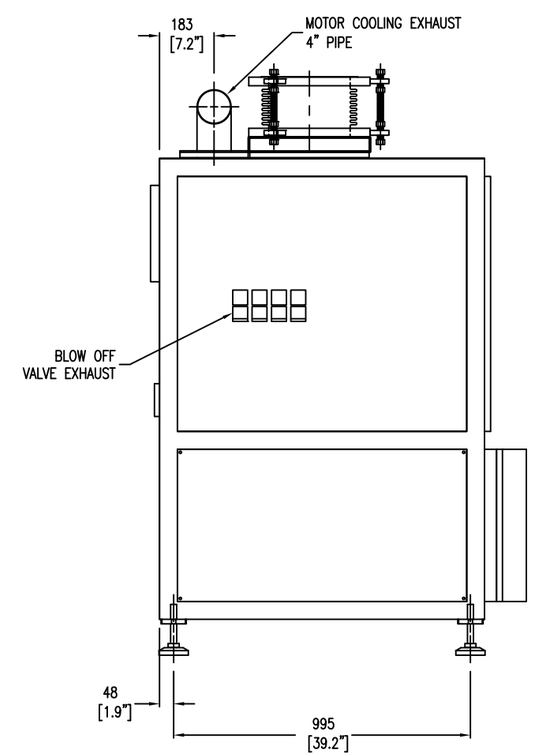

RIGHT VIEW

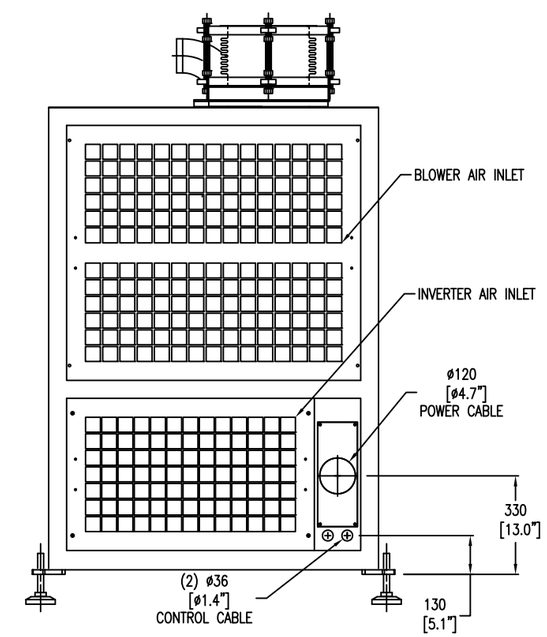

REAR

NOTICE:
THIS DRAWING AND ALL INFORMATION HEREIN IS THE PROPERTY OF AERZEN USA INC. AND ITS SUBSIDIARIES AND SHALL NOT BE REPRODUCED BY ANY MEANS IN WHOLE OR **IN PART OR USED AS THE BASIS FOR MANUFACTURE WITHOUT WRITTEN PERMISSION.**

AERZEN USA CORP.
108 Independence Way, COATESVILLE PA 19320
(610) 380-0244 PH, (610) 380-0278 FX

TITLE				
TURBO BLOWER ASSEMBLY TB150-1.0S 10" - 150# ANSI FLANGE DISCHARGE				
DATE 08/03/2011	DRAWN BY: CJH	CHECKED BY: JPS	P.M. APPROVAL:	SCALE: MODEL SPACE 1 :1
DRAWING NO: GB-006058-150-1.0			REVISION NO: D	SHEET: 1/1

OBJECTIVE: To determine the operating characteristics of the anaerobic selector and anoxic tank at max capacity conditions

CALCULATIONS:

Table 1 - Anaerobic Selector Design Summary

Parameter	Startup Ann. Avg.	Future Ann. Avg.	Future Max. Month
Flow (mgd)	1.2	1.8	1.6
Number of Tanks Online	2	2	2
Tank Volume, ea. (gal)	78,826	78,826	78,826
Online Tank Volume (gal)	157,652	157,652	157,652
HRT (hrs)	3.1	2.1	2.4
Typical RAS Conc. (mg/L)	8,000	8,000	8,000
Typical RAS Flow (mgd)	0.9	1.4	1.2
Typical MLSS Conc (mg/L)	3,429	3,429	3,429
Anaerobic Mass (lb MLSS)	4,508	4,508	4,508
Anaerobic SRT (days)	1.5	1.0	1.0

- 0.75 Q RAS rate assumed

SLUDGE PRODUCTION CALCULATIONS			
	Startup Ann. Avg.	**Future Ann. Avg.**	**Future Max. Month**
Flow (mgd)	1.2	1.8	1.6
Inf. BOD (mg/L)	300	300	350
Eff BOD (mg/L)	10	10	10
BOD Removed (ppd)	2,999	4,353	4,537
Yield (lb TSS/ lb BOD)	1	1	1
Total WAS Production (ppd)	2,999	4,353	4,537

Table 2 - Anoxic Tank Design Summary

Parameter	Startup Ann. Avg.	Future Ann. Avg.	Future Max. Month
Flow (mgd)	1.2	2.5	1.6
Number of Tanks Online	2	2	2
Tank Volume, ea. (gal)	110,962	110,962	110,962
Online Tank Volume (gal)	221,924	221,924	221,924
HRT (hrs)	4.3	2.1	3.3
Typical RAS Conc. (mg/L)	8,000	8,000	8,000
Typical RAS Flow (mgd)	0.9	1.9	1.2
Typical MLSS Conc (mg/L)	3,429	3,429	3,429
Anaerobic Mass (lb MLSS)	6,346	6,346	6,346
Anaerobic SRT (days)	2.1	1.0	1.4

- 0.75 Q RAS rate assumed

SLUDGE PRODUCTION CALCULATIONS			
	Startup Ann. Avg.	**Future Ann. Avg.**	**Future Max. Month**
Flow (mgd)	1.2	2.5	1.6
Inf. BOD (mg/L)	300	300	350
Eff BOD (mg/L)	10	10	10
BOD Removed (ppd)	2,999	6,047	4,537
Yield (lb TSS/ lb BOD)	1	1	1
Total WAS Production (ppd)	2,999	6,047	4,537

THIS PAGE INTENTIONALLY LEFT BLANK

Erie Clarifier Capacity Calculations

# Clarifiers	2				
Diameter	70				
MLSS	2500	ave	4600	peak	
RSFdecimal of Q	0.4	ave	0.75	peak	
Allowable SOR	500	gpd/sq ft	600		Higher than with Extended aeration due to denser sludge
Allowable SLR	25	lb/sq ft/d	30		Sludge Loading Rate

Clarifier area	7697	ft2		
Capacity based upon SOR	3.848	@500	4.62	@600
Capacity based upon SLR				
Allowable solids load	192423	@25	230907.6	@30
Hydraulic capacity, MGD	5.3	@2500 & 75% RS	6.3	@2500 & 75%
	2.9	@4600 & 75%	3.4	@4600 & 75%
	6.6	@ 2500 & 40%	7.9	@2500 & 40%
	3.6	@ 4600 & 40%	4.3	@ 4600 & 40%
	6.2	@ 2500 & 50%		Most realistic data - 2,500 mg/L at 50% return MLSS has been coming down as has RSF

Red means little chance of these conditions over a month period

THIS PAGE INTENTIONALLY LEFT BLANK

Notes from lab testing of Erie WWTP and WTP sludges

R Olson / FKC
10/4/13

Background:

- Dave Smoljan called me Friday morning, Sept 27th and said they were frustrated with the FKC process. He stated:
    - The operators had to run the press almost continuously (previously 60 gpm at 0.7% inlet) and it wasn't keeping up
    - The operators had lime scale problems which required frequent shutdown and cleanup
    - The operators had foaming problems at below 15 deg C
    - The operators couldn't flocculate the sludge during the summer when the WTP was using Activated Carbon for taste and clarity control
    - There is currently a significant amount of silt in the plant right now due to the flooding
    - The WTP is currently discharging about 27,000 to 30,000 gallons of alum sludge per day into the wastewater system.
- I asked for sludge samples from the WWTP and WTP plant to be shipped out Monday Sept 30th
- I received samples of WWTP WAS and WTP alum sludge from Erie on Oct 1st
- I picked up City of Sequim, WA WWTP WAS sample the same morning

A brief overview of the lab testing is as follows:

Erie WAS	1.23% Total Solids	39.7% non-volatile content	pH = 7
Erie WTP alum sludge	1.25% Total Solids	41.7% non-volatile content	pH = 5
Sequim WAS	1.53% Total Solids	18.8% non-volatile content	pH = 7

- A blend was made of Sequim WAS solids and 25% Erie WTP alum sludge at a ratio of 75:25
- Lime was added to the sludges and the following pH's were recorded

Erie WAS	200 lbs lime / ton sludge	pH = 10
Erie WAS	300 lbs lime / ton sludge	pH = 11.5
Erie WAS	400 lbs lime / ton sludge	pH = 12+
Sequim WAS	200 lbs lime / ton sludge	pH = 11.5
Sequim WAS	300 lbs lime / ton sludge	pH = 12+
Blend	200 lbs lime / ton sludge	pH = 10
Blend	300 lbs lime / ton sludge	pH = 11.5
Blend	400 lbs lime / ton sludge	pH = 12+

- Flocculation tests were performed on the sludges with the following results:

	7cc 295FL	10c 295FL	12.5cc 295FL	1cc muriatic acid + 7cc 295FL	5cc 186K + 7cc 295FL	5cc 193K + 7cc 295FL
Erie WAS	MARG FLOC	OKAY FLOC	GOOD FLOC	OKAY FLOC	OKAY FLOC	OKAY FLOC
	14cc 295FL	20cc 295FL	25cc 295FL	1cc muriatic acid + 14cc 295FL	10cc 186K + 14cc 295FL	10cc 193K + 14cc 295FL
Sequim WAS	MARG FLOC	OKAY FLOC	GOOD FLOC	GOOD FLOC	OKAY FLOC	OKAY FLOC
Blend	POOR FLOC	MARG FLOC	OKAY FLOC	OKAY FLOC	MARG FLOC	MARG FLOC

- In summary, the liming and flocculation tests showed:
    - The Erie WAS required a higher lime dosage than the Sequim WAS to reach pH 12+. This indicates the Erie WAS is more buffered
    - The blend of Sequim WAS and Erie WTP alum sludge required more lime than the Sequim WAS alone to reach pH 12+. This indicates the Erie WTP alum sludge acts as a buffering agent.
    - The non-volatile content of the Erie WAS was 39.7% while the non-volatile content Sequim WAS was only 18.8%. This indicates that there is a significant amount of inorganic solids in the Erie plant right now probable consisting of a combination of silt from the flooding and alum sludge from the Erie WTP.
- The plant design documents show a max design WAS production rate of 3,632 lbs per day at a 1.5 mgd. If the screw press was running continuously at 60 gpm of sludge at 0.7% inlet consistency at 90% capture then the press was removing 4,536 lbs per day of sludge solids plus the lime. Based on these numbers, the press is putting out 900 lbs of solids more per day than the plant was designed for.
- The plant design numbers do not appear to include solids from the Erie WTP plant. Apparently this sludge was added after plant startup. It would be very interesting to confirm what date this sludge was added to the wastewater stream and see if there is any correlation to process issues with the dewatering system at the plant.
- Per Burns & McDonnell the solids loading from the Erie WTP is as follows:
    - Erie feeds between 10-30 mg/L of alum which corresponds to 83 – 250 lbs/day/MG of alum sludge.
    - Erie feeds between 1-14 mg/L of PAC seasonally which corresponds to 8 – 117 lbs/day/MG of PAC sludge.
    - They have very little TSS (Turbidity is typically less than 5 NTU). The TSS is trumped by the alum.
- These numbers from Burns & McDonnell are not specific enough to quantify the amount of solids coming from the WTP but indicate that the amount may be significant.
- If the WTP is currently discharging about 27,000 to 30,000 gallons of alum sludge per day into the wastewater system and it averages 1.25% total solids such as the sample received then the WTP is sending 2,815 to 3,128 lbs per day of solids to the WWTP. This number sounds high but should be verified because it appears to be significant.

Conclusions:

- It appears the Erie WTP alum/PAC sludge is having a detrimental effect on both the quality and quantity of the WWTP sludge.
- One of the problems at the plant is the high lime dose required to increase the pH of the sludge to over 12 as required for vector attraction reduction. The lab testing showed that the Erie WTP alum/PAC sludge, when added to a normal WAS, did indeed increase the lime dosage required to reach a pH of 12+. This would indicate that removing the Erie WTP alum/PAC sludge from the wastewater stream would decrease the amount of lime required at the WWTP plant thereby reduce the scaling and resulting cleanup time on the RST and screw press.
- The solids numbers at the plant are higher than designed therefore the operational hours of the screw press are also higher than designed. Since the volume of the alum/PAC solids from the WTP seem significant (25% to 50% of the total solids loading to the WWTP) it appears that removing this waste stream from the WWTP influent would help with the run time issues with the screw press.
- It appears that there has been a connection already made between the activated carbon addition at the WWTP and flocculation problems at the WWTP so removing the WTP alum/PAC sludge may address this problem also.
- If possible it appears that it would be reasonable to redirect the WTP alum/PAC sludge away from the WWTP for time period sufficient (one month?) to demonstrate the effects this sludge is having on the WWTP.

THIS PAGE INTENTIONALLY LEFT BLANK

CATERPILLAR

Project Sizing Report

Price List: U.S.

Version: 2.9.0
Data Date: 9/10/2013

Modified Date	2/10/2014	Electricity Supply	60 Hz 480/277 V
Customer Name	Town of Erie	Connection	STAR
Project Name/Ref #	WRF Operations Study	Max Ambient Temperature	85.0F
Prepared By	Phil Craig	Altitude	5,130.0 Ft. A.S.L

Load Analysis Summary

Max Transient Load Step	107.7 SkVA	82.6 SkW	
Peak Transient Load	226.5 SkVA	191.0 SkW	
Final Running Load	182.8 kVA	167.5 kW	0.92 PF
Max Running Non Linear Load	180.2 RkVA		
Maximum Running Load	182.8 kVA	167.5 kW	

Generator Set

Genset Model	(1) of C9	Nameplate Rating	200.0 kW / 250.0 kVA
Voltage Regulator and Slope	VR6, 2:1 slope		0.8 PF
Feature Code	C09DE38	Site Output	184.6 kW / 230.7 kVA
Fuel	Diesel	Rating Type	Standby
Dry Weight	0.0 lbs		
Length / Width / Height	0.0in / 0.0in / 0.0in		

Alternator Motor Starting Capability *		Block Load (only) Transient Response *			
Instantaneous Voltage Dip ***	skVA Capability	Load Change %	FDip %	VDip %	Recovery Time (sec)
10%	169	0 - 25	< 5.0	< 5.0	< 3
20%	381	0 - 50	6.2	6.9	< 3
30%	652	0 - 75	12.9	14.6	< 3
35%	820	0 - 100	22.2	25.4	< 3

Engine Technical Data at 100% Load

Make/Model	C9	Emissions/Certifications	EPA T3
Aspiration	TA	Governor	
Cylinder Configuration	INLINE - 6	Aftercooler Type	ATAAC
Displacement	537 Cubic Inch / 9 Liter	Rejection To Jacket Water	4,948 BTU/min
Speed	1800 RPM	Rejection To Aftercooler	3,298 BTU/min
Fuel Rate	15.4 gph	Rejection To Oil Cooler	1,763 BTU/min
Exhaust Sound Level	0 dBA at 23 ft/7 m	Rejection To Atmosphere	796 BTU/min
Mechanical Sound Level	0 dBA at 23 ft/7 m	Rejection To Exhaust	12,909 BTU/min
Max Combustion Inlet Air Temp	121.5 F	Exhaust Recoverable	6,824 BTU/min
Combustion Airflow	776.9 cfm	Exhaust Stack Temperature	816 F
Cooling System Ambient Capability	131.0 F	Exhaust Flow Rate	1,899.9 cfm
Cooling System Airflow **	17,551 cfm	Exhaust Flange Size	4in
Engine Performance Number	EM0095		

Alternator Technical Data

Alternator Arrangement Number	3381949	Insulation	CLASS H
Alternator Type / Frame Size	LC / LC5024H	Temperature Rise	105 C
Alternator Winding Pitch	0.6667	Rejection To Atmosphere	841.7 BTU/min
Number Of Poles	4	Peak Amps / Rated Amps	**** / 300.7
Excitation / Winding Type	AREP / RANDOM	Short Circuit Ratio	0.4700

Reactances		per unit	ohms	Generator Time Constants		sec
Subtransient - Direct Axis	X"d	0.0777	0.0716	Open Circuit Transient - Direct Axis	T'd0	2.1050
Subtransient - Quadrature Axis	X"q	0.0959	0.0884	Short Circuit Transient - Quadrature Axis	T'd	0.1000
Transient - Saturated	X'd	0.1288	0.1187	Open Circuit Subtransient - Direct Axis	T"d0	0.0170
Synchronous - Direct Axis	Xd	2.7148	2.5020	Short Circuit Subtransient - Direct Axis	T"d	0.0100
Synchronous - Quadrature Axis	Xq	1.6289	1.5012	Open Circuit Subtransient - Quadrature Axis	T"q0	0.1690
Negative Sequence	X2	0.0865	0.0797	Short Circuit Subtransient - Quadtrature Axis	T"q	0.0100
Zero Sequence	X0	0.0043	0.0040	Armature Short Circuit	TA	0.0150

Notes:

* Block Load (only) Transient Response values are at factory conditions. Genset block load capabilities at site conditions may vary from factory transient response test results due to a variance in site altitude or ambient conditions.

** Based on 1/2 inch water (0.12 kPa) external restriction and 1000 ft (300m) altitude.

*** Based on instantaneous voltage dip as defined per NEMA MG-1.

**** See your Caterpillar dealer and/or Spec Sheet for technical information.

Maximum voltage distortion due to non-linear load calculated to be within specified limits.

Overall dimensions and weight not to be used for installation. Contact your Caterpillar dealer for specific dimension drawings.

Caterpillar makes no express warranties and disclaims all implied warranties including merchantability and fitness for a particular purpose regarding program. Caterpillar shall have no liability in law or equity for damages consequential or otherwise arising from use of program and related material or any part thereof. The analysis provided from SpecSizer is only for the expected results at the generator terminals. Analysis of transient conditions of any device downstream is the responsibility of the system designer.

CATERPILLAR

Project Load Report

Version: 2.9.0

Data Date: 9/10/2013

Modified Date	2/10/2014	Rating Type	Standby	Max Ambient Temperature	85 Deg. F
Customer Name:	Town of Erie	Fuel	Diesel	Altitude	5,130.0 Ft. A.S.L
Project Name/Ref #	WRF Operations Study	Electricity Supply	60 Hz 480/277 V		
Prepared By	Phil Craig				

Load Details			Permitted Dip		Predicted Dip		Load Analysis										
Load Step		Load Description	Frequency	Voltage	Frequency	Voltage	Transient Inrush		Running		Resultant Peak		Cumulative Running		Fdip	Vdip 1	Vdip 2
							SkVA	SkW	kVA	kW	SkVA	SkW	kVA	kW			
Step 1		Selection Criteria: Non-linear load requirements															

<5.0% 5.9% 5.0%

1.1	1	15.00 HP - Influent Pump 1								
		NEMA, 3-Phase Motor, VFD, 110% Current Limit, Single Operating Point	20%	20%		1.5	1.4	15.2	13.6	
1.2	1	15.00 HP - Influent Pump 2								
		NEMA, 3-Phase Motor, VFD, 110% Current Limit, Single Operating Point	20%	20%		1.5	1.4	15.2	13.6	
1.3	1	15.00 HP - Influent Pump 3								
		NEMA, 3-Phase Motor, VFD, 110% Current Limit, Single Operating Point	20%	20%		1.5	1.4	15.2	13.6	
1.4	1	15.00 HP - RAS Pump 1								
		NEMA, 3-Phase Motor, VFD, 110% Current Limit, Single Operating Point	20%	20%		1.5	1.4	15.2	13.6	
1.5	1	30.00 kVA - ELP								
		Fluorescent Lighting, Distr. 3-Phase	30%	30%		38.0	28.5	30.0	28.5	
1.6	1	15.00 HP - SWG Pump 1								
		NEMA, 3-Phase Motor, VFD, 110% Current Limit, Single Operating Point	20%	20%		1.5	1.4	15.2	13.6	
1.7	1	0.50 HP - Sec Clarifier 1								
		NEMA, 3-Phase Motor, Across the line, Loaded	30%	30%		5.3	4.0	0.7	0.5	
1.8	1	0.50 HP - Sec Clarifier 2								
		NEMA, 3-Phase Motor, Across the line, Loaded	30%	30%		5.3	4.0	0.7	0.5	
1.9	1	30.00 kVA - ELP2								
		Fluorescent Lighting, Distr. 3-Phase	30%	30%		38.0	28.5	30.0	28.5	
1.10	1	30.00 HP - Influent Pump 4 (New)								
		NEMA, 3-Phase Motor, VFD, 110% Current Limit, Single Operating Point	20%	20%		3.0	2.7	29.6	26.6	
1.11	1	15.00 HP - RAS Pump 2 (New)								
		NEMA, 3-Phase Motor, VFD, 110% Current Limit, Single Operating Point	20%	20%		1.5	1.4	15.2	13.6	

Load Details			Permitted Dip		Predicted Dip		Load Analysis										
Load Step		Load Description	Frequency	Voltage	Frequency	Voltage	Transient Inrush		Running		Resultant Peak		Cumulative Running		Fdip	Vdip 1	Vdip 2
							SkVA	SkW	kVA	kW	SkVA	SkW	kVA	kW			
1.12	1	1.00 HP - Sec Clarifier 3 (New)															
		NEMA, 3-Phase Motor, Across the line, Loaded	30%	30%			9.5	6.7	1.4	1.0							
		Step 1 Total	20%	20%	<5.0%	5.9%	107.7	82.6	182.8	167.5							
		Total Through Step 1									226.5	191.0	182.8	167.5			

Load Analysis Summary

Maximum Step		Maximum Peak		Final Running	
SkVA	SkW	SkVA	SkW	kVA	kW
107.7	82.6	226.5	191.0	182.8	167.5

Load Scenario

Step 1

Frequency Dip
- Permitted - 20.0%
- Predicted - <5.0%

Voltage Dip
- Permitted - 20.0%
- Predicted - 5.9%
  - Synchronous (Vdip 1) - 5.9%
  - Frequency-induced (Vdip 2) - 5.0%

Selection Criteria: Non-linear load requirements

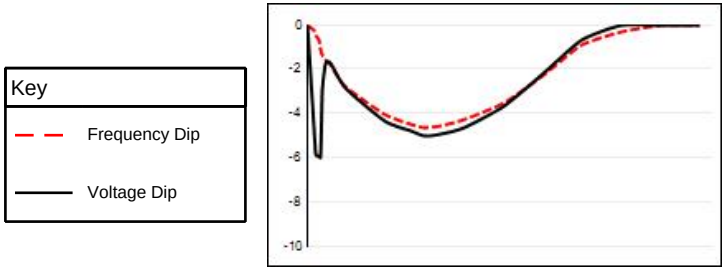

Fdip:	Vdip 1:	Vdip 2:
<5.0%	5.9%	5.0%

Selected Generator Set

200.0 EkW / 250.0 kVA 60 Hz Standby, 480/277V, C9 ATAAC EPA T3, LC5024H AREP LC RANDOM, VR6 2:1 slope

Block Load (only) Transient Response *

Load Change %	FDip %	VDip %	Recovery Time (sec)
0 - 25	< 5.0	< 5.0	< 3
0 - 50	6.2	6.9	< 3
0 - 75	12.9	14.6	< 3
0 - 100	22.2	25.4	< 3

Transient Performance

The selected representative generator set was factory tested in accordance to NFPA 110 block load step capability and acceptable frequency and voltage response on load addition and rejection.

* Block Load (only) Transient Response values are at factory conditions. Genset block load capabilities at site conditions may vary from factory transient response test results due to a variance in site altitude or ambient conditions.

0 - 100 Load Change %

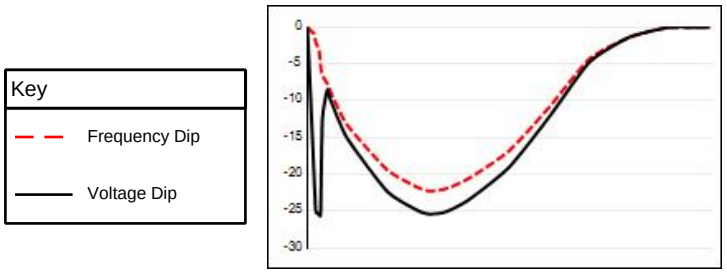

0 < 3

Recovery Time (sec)

Project Sizing Report

Price List: U.S.

Version: 2.9.0
Data Date: 9/10/2013

Appendix H
With Blower

Modified Date	2/10/2014	Electricity Supply	60 Hz 480/277 V
Customer Name	Town of Erie	Connection	STAR
Project Name/Ref #	WRF Operations Study	Max Ambient Temperature	85.0F
Prepared By	Phil Craig	Altitude	5,130.0 Ft. A.S.L

Load Analysis Summary

Max Transient Load Step	121.3 SkVA	95.1 SkW	
Peak Transient Load	379.5 SkVA	329.3 SkW	
Final Running Load	322.4 kVA	293.2 kW	0.91 PF
Max Running Non Linear Load	319.7 RkVA		
Maximum Running Load	322.4 kVA	293.2 kW	

Generator Set

Genset Model	(1) of C15	Nameplate Rating	350.0 kW / 437.5 kVA
Voltage Regulator and Slope	VR6, 2:1 slope		0.8 PF
Feature Code	C15DE7B	Site Output	350.0 kW / 437.5 kVA
Fuel	Diesel	Rating Type	Standby
Dry Weight	7,319.8 lbs		
Length / Width / Height	148.6in / 43.7in / 82.3in		

Alternator Motor Starting Capability *		Block Load (only) Transient Response *			
Instantaneous Voltage Dip ***	skVA Capability	Load Change %	FDip %	VDip %	Recovery Time (sec)
10%	274	0 - 25	< 5.0	< 5.0	< 3
20%	616	0 - 50	< 5.0	6.7	< 3
30%	1,056	0 - 75	9.2	11.4	< 3
35%	1,326	0 - 100	23.5	30.4	< 3

Engine Technical Data at 100% Load

Make/Model	C15	Emissions/Certifications	EPA T3
Aspiration	TA	Governor	ELEC
Cylinder Configuration	INLINE - 6	Aftercooler Type	ATAAC
Displacement	928 Cubic Inch / 15 Liter	Rejection To Jacket Water	8,701 BTU/min
Speed	1800 RPM	Rejection To Aftercooler	5,186 BTU/min
Fuel Rate	28.6 gph	Rejection To Oil Cooler	3,276 BTU/min
Exhaust Sound Level	0 dBA at 23 ft/7 m	Rejection To Atmosphere	4,345 BTU/min
Mechanical Sound Level	0 dBA at 23 ft/7 m	Rejection To Exhaust	24,056 BTU/min
Max Combustion Inlet Air Temp	118.9 F	Exhaust Recoverable	16,435 BTU/min
Combustion Airflow	1,243.1 cfm	Exhaust Stack Temperature	919 F
Cooling System Ambient Capability	132.8 F	Exhaust Flow Rate	3,333.7 cfm
Cooling System Airflow **	25,427 cfm	Exhaust Flange Size	6in
Engine Performance Number	DM8149		

Alternator Technical Data

Alternator Arrangement Number	2351204	Insulation	CLASS H
Alternator Type / Frame Size	LC / LC6124B	Temperature Rise	130 C
Alternator Winding Pitch	0.6667	Rejection To Atmosphere	1,381.9 BTU/min
Number Of Poles	4	Peak Amps / Rated Amps	**** / 526.8
Excitation / Winding Type	AREP / RANDOM	Short Circuit Ratio	0.3800

Reactances		per unit	ohms	Generator Time Constants		sec
Subtransient - Direct Axis	X"d	0.1348	0.0710	Open Circuit Transient - Direct Axis	T'd0	1.7380
Subtransient - Quadrature Axis	X"q	0.1829	0.0963	Short Circuit Transient - Quadrature Axis	T'd	0.1000
Transient - Saturated	X'd	0.1927	0.1015	Open Circuit Subtransient - Direct Axis	T"d0	0.0130
Synchronous - Direct Axis	Xd	3.3496	1.7640	Short Circuit Subtransient - Direct Axis	T"d	0.0100
Synchronous - Quadrature Axis	Xq	2.0098	1.0584	Open Circuit Subtransient - Quadrature Axis	T"q0	0.1100
Negative Sequence	X2	0.1584	0.0834	Short Circuit Subtransient - Quadtrature Axis	T"q	0.0100
Zero Sequence	X0	0.0095	0.0050	Armature Short Circuit	TA	0.0150

Notes:

* Block Load (only) Transient Response values are at factory conditions. Genset block load capabilities at site conditions may vary from factory transient response test results due to a variance in site altitude or ambient conditions.

** Based on 1/2 inch water (0.12 kPa) external restriction and 1000 ft (300m) altitude.

*** Based on instantaneous voltage dip as defined per NEMA MG-1.

**** See your Caterpillar dealer and/or Spec Sheet for technical information.

Maximum voltage distortion due to non-linear load calculated to be within specified limits.

Overall dimensions and weight not to be used for installation. Contact your Caterpillar dealer for specific dimension drawings.

Caterpillar makes no express warranties and disclaims all implied warranties including merchantability and fitness for a particular purpose regarding program. Caterpillar shall have no liability in law or equity for damages consequential or otherwise arising from use of program and related material or any part thereof. The analysis provided from SpecSizer is only for the expected results at the generator terminals. Analysis of transient conditions of any device downstream is the responsibility of the system designer.

CATERPILLAR

Project Load Report

Version: 2.9.0

Data Date: 9/10/2013

Modified Date	2/10/2014	Rating Type	Standby	Max Ambient Temperature	85 Deg. F
Customer Name:	Town of Erie	Fuel	Diesel	Altitude	5,130.0 Ft. A.S.L
Project Name/Ref #	WRF Operations Study	Electricity Supply	60 Hz 480/277 V		
Prepared By	Phil Craig				

Load Details			Permitted Dip		Predicted Dip		Load Analysis										
Load Step		Load Description	Frequency	Voltage	Frequency	Voltage	Transient Inrush		Running		Resultant Peak		Cumulative Running		Fdip	Vdip 1	Vdip 2
							SkVA	SkW	kVA	kW	SkVA	SkW	kVA	kW			
Step 1		Selection Criteria: Non-linear load requirements															
															<5.0%	<5.0%	<5.0%
1.1	1	15.00 HP - Influent Pump 1															
		NEMA, 3-Phase Motor, VFD, 110% Current Limit, Single Operating Point	20%	20%			1.5	1.4	15.2	13.6							
1.2	1	15.00 HP - Influent Pump 2															
		NEMA, 3-Phase Motor, VFD, 110% Current Limit, Single Operating Point	20%	20%			1.5	1.4	15.2	13.6							
1.3	1	15.00 HP - Influent Pump 3															
		NEMA, 3-Phase Motor, VFD, 110% Current Limit, Single Operating Point	20%	20%			1.5	1.4	15.2	13.6							
1.4	1	15.00 HP - RAS Pump 1															
		NEMA, 3-Phase Motor, VFD, 110% Current Limit, Single Operating Point	20%	20%			1.5	1.4	15.2	13.6							
1.5	1	30.00 kVA - ELP															
		Fluorescent Lighting, Distr. 3-Phase	30%	30%			38.0	28.5	30.0	28.5							
1.6	1	15.00 HP - SWG Pump 1															
		NEMA, 3-Phase Motor, VFD, 110% Current Limit, Single Operating Point	20%	20%			1.5	1.4	15.2	13.6							
1.7	1	0.50 HP - Sec Clarifier 1															
		NEMA, 3-Phase Motor, Across the line, Loaded	30%	30%			5.3	4.0	0.7	0.5							
1.8	1	0.50 HP - Sec Clarifier 2															
		NEMA, 3-Phase Motor, Across the line, Loaded	30%	30%			5.3	4.0	0.7	0.5							
1.9	1	30.00 kVA - ELP2															
		Fluorescent Lighting, Distr. 3-Phase	30%	30%			38.0	28.5	30.0	28.5							
1.10	1	30.00 HP - Influent Pump 4 (New)															
		NEMA, 3-Phase Motor, VFD, 110% Current Limit, Single Operating Point	20%	20%			3.0	2.7	29.6	26.6							
1.11	1	15.00 HP - RAS Pump 2 (New)															
		NEMA, 3-Phase Motor, VFD, 110% Current Limit, Single Operating Point	20%	20%			1.5	1.4	15.2	13.6							

Load Details			Permitted Dip		Predicted Dip		Load Analysis										
Load Step		Load Description	Frequency	Voltage	Frequency	Voltage	Transient Inrush		Running		Resultant Peak		Cumulative Running		Fdip	Vdip 1	Vdip 2
							SkVA	SkW	kVA	kW	SkVA	SkW	kVA	kW			
1.12	1	1.00 HP - Sec Clarifier 3 (New)															
		NEMA, 3-Phase Motor, Across the line, Loaded	30%	30%			9.5	6.7	1.4	1.0							
1.13	1	150.00 HP - Blower 1															
		NEMA, 3-Phase Motor, VFD, 110% Current Limit, Single Operating Point	20%	20%			14.0	12.6	139.6	125.7							
		Step 1 Total	20%	20%	<5.0%	<5.0%	121.3	95.1	322.4	293.2							
		Total Through Step 1									379.5	329.3	322.4	293.2			

Load Analysis Summary

Maximum Step		Maximum Peak		Final Running	
SkVA	SkW	SkVA	SkW	kVA	kW
121.3	95.1	379.5	329.3	322.4	293.2

Load Scenario

Step 1

Frequency Dip
- Permitted - 20.0%
- Predicted - <5.0%

Voltage Dip
- Permitted - 20.0%
- Predicted - <5.0%
  - Synchronous (Vdip 1) - <5.0%
  - Frequency-induced (Vdip 2) - <5.0%

Selection Criteria: Non-linear load requirements

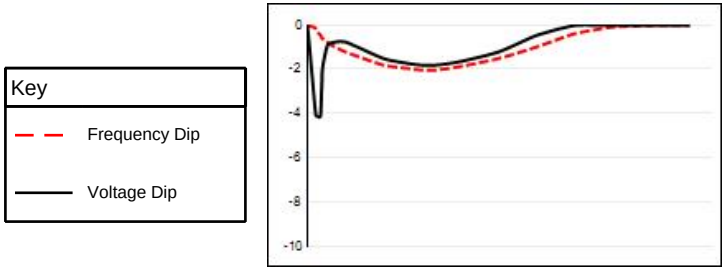

Fdip:	Vdip 1:	Vdip 2:
<5.0%	<5.0%	<5.0%

Selected Generator Set

350.0 EkW / 437.5 kVA 60 Hz Standby, 480/277V, C15 ATAAC EPA T3, LC6124B AREP LC RANDOM, VR6 2:1 slope

Block Load (only) Transient Response *

Load Change %	FDip %	VDip %	Recovery Time (sec)
0 - 25	< 5.0	< 5.0	< 3
0 - 50	< 5.0	6.7	< 3
0 - 75	9.2	11.4	< 3
0 - 100	23.5	30.4	< 3

Transient Performance

The selected representative generator set was factory tested in accordance to NFPA 110 block load step capability and acceptable frequency and voltage response on load addition and rejection.

* Block Load (only) Transient Response values are at factory conditions. Genset block load capabilities at site conditions may vary from factory transient response test results due to a variance in site altitude or ambient conditions.

0 - 100 Load Change %

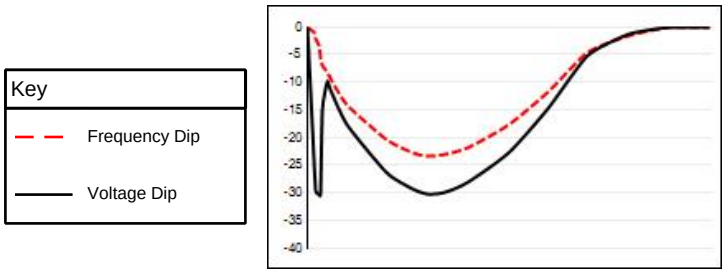

0 < 3

Recovery Time (sec)

Aeration Calculations
Town of Erie Blowers

Diffused	Mechanical		
0.12		SOTE/SOTF	Standard oxygen Transfer efficiency, percent
0.85		Alpha	Rate of oxygen transfer dirty/clean water
0.95	0.95	Beta	Oxygen saturation dirty/clean
4940	4940		Altitude, ft
12.23754	12.23754	P	Atmospheric pressure at altitude, pick Table 1
20		T	Liquid Temperature, Deg C
9.17	9.17	C14.7	O2 saturation of clean water at 14.7 psi & water temp, table 2
7.63	7.63	Csw	O2 saturation of clean water at site condition and pressure
4		CL	Mixed liquor DO
1.024	1.024	Theta	Temperature correction factor
9.17	9.17	Cs	O2 saturation clean water at std. Conditions, 9.17 mg/L
0.036175	0	AOTE/AOTI	Actual o2 transfer rate, % or lb O2/hp-hr
40		Tair	Air Temperature, Deg C
2585		SCFM	Insert SCFM if known
1		#	# Blowers
2343		lb O2/day	O2 Transferred
10056	lbs air/day		
419	lbs air/hr		

Table 3 Formula Approach

Elevation	4940	ft
P	12.23754	psia

At 2585 SCFM from the K-Turbo Blower

O2 Transferred at 12% =	2343
O2 Transferred at 8% =	1562

Oxygen Requirements

Ammonia Loading =	41	mg/l	Assume 4.6 lbs O2 / lb NH3 required
BOD Loading =	330	mg/l	Assume 1.2 lbs O2 / lb BOD required
Take Denitrification Credit =	Yes		Yes or No
Take Wasting Credit =	Yes		Yes or No
Facility Capacity at 12% Transfer =	0.96	MGD	
Facility Capacity at 8% Transfer =	0.64	MGD	

Table 1		Table 2	
Elevation	psia	T deg C	O2 Sat mg/L
0	14.76	0	14.62
250	14.62	1	14.23
500	14.48	2	13.84
750	14.33	3	13.48
1000	14.18	4	13.13
1250	14.03	5	12.8
1500	13.91	6	12.48
1750	13.77	7	12.17
2000	13.64	8	11.87
2250	13.51	9	11.59
2500	13.39	10	11.33
2570	13.26	11	11.09
3000	13.14	12	10.83
3250	13.02	13	10.6
3500	12.9	14	10.37
3750	12.78	15	10.15
4000	12.65	16	9.95
4250	12.52	17	9.74
4500	12.4	18	9.54
4570	12.29	19	9.35
5000	12.19	20	9.17
5250	12.08	21	8.99
5500	11.97	22	8.83
5750	11.86	23	8.68
6000	11.75	24	8.53
6250	11.64	25	8.38
6500	11.52	26	8.22
6750	11.43	27	8.07
7000	11.33	28	7.92
7250	11.23	29	7.77
7500	11.13	30	7.63
7750	11.03		
8000	10.93		
8250	10.84		
8500	10.75		
8750	10.67		
9000	10.6		

THIS PAGE INTENTIONALLY LEFT BLANK

OBJECTIVE: Calculate the MM Influent WW Capacity associated with Solids System Limits
Option 1 - Screw press operates at 15 hours per day 7 days per week.

GIVEN: **Projected Loads/ Flow**

Volume of WAS Tank	172340	gal
1.5 HRT in Feed Tank	63000	gal sludge per day
Screw Press Hydraulic Limit	60	gpm
Screw Press Solids Limit	255	lbs/hr

Parameter	Flow (MGD)	Influent Conc (mg/l)	Influent BOD (ppd)	Effluent Conc (mg/l)	Effluent BOD (ppd)
Max. Month Loading (ppd)	1.3	330.0	3,578	10	108

Biosolids Yield	0.90	lb VSS/ lb BOD influent
WAS Volatile Fraction	0.85	lb VSS/ lb TSS
Total WAS Yield	1.06	
WAS Concentration	8,000	mg/L
	0.8%	
TWAS Feed	8,000	mg/L
	0.8%	

CALCULATIIONS:

1) Calculate the volume of sludge wasted per day and the thickened volume fed to stabilization process

Max. Month Load			
Total WAS Load Gen.	3,674	lb TSS/ day	*- (BOD in - BOD out) * Total WAS Yield*
Total Volatile Suspended Solids	3,122	lb VSS/day	
Total WAS Volume	55,059	gal WAS/ day	*Volume stored in WAS storage tank*
Total TWAS Feed Volume	55,059	gal/day	
Filtrate Side Stream	0	gal/day	

2) Calculate the Screw Press Design Criteria

Number of thickener in operation	1	
Days of thickener operation	7	days/week
Hours of thickener operation	15	hours/day

Max Month Load		
Thickener Flow Rate	**61**	gpm
Thickener Solids Throughput	3,674	lb TSS/ day
Thickener Solids Throughput	**245**	lbs TSS/hour

CONCLUSION:

Solids system is limited at 60 gpm through screw press

OBJECTIVE: Calculate the MM Influent WW Capacity associated with Solids System Limits
Option 2 - Screw press operates at 20 hours per day 7 days per week.

GIVEN: **Projected Loads/ Flow**

Volume of WAS Tank	172340	gal
1.5 HRT in Feed Tank	63000	gal sludge per day
Screw Press Hydraulic Limit	60	gpm
Screw Press Solids Limit	255	lbs/hr

Parameter	Flow (MGD)	Influent Conc (mg/l)	Influent BOD (ppd)	Effluent Conc (mg/l)	Effluent BOD (ppd)
Max. Month Loading (ppd)	1.7	330.0	4,679	10	142

Biosolids Yield	0.90	lb VSS/ lb BOD influent
WAS Volatile Fraction	0.85	lb VSS/ lb TSS
Total WAS Yield	1.06	
WAS Concentration	8,000	mg/L
	0.8%	
TWAS Feed	8,000	mg/L
	0.8%	

CALCULATIIONS:

1) Calculate the volume of sludge wasted per day and the thickened volume fed to stabilization process

Max. Month Load			
Total WAS Load Gen.	4,804	lb TSS/ day	*- (BOD in - BOD out) * Total WAS Yield*
Total Volatile Suspended Solids	4,083	lb VSS/day	
Total WAS Volume	72,000	gal WAS/ day	*Volume stored in WAS storage tank*
Total TWAS Feed Volume	72,000	gal/day	
Filtrate Side Stream	0	gal/day	

2) Calculate the Screw Press Design Criteria

Number of thickener in operation	1	
Days of thickener operation	7	days/week
Hours of thickener operation	20	hours/day

Max Month Load		
Thickener Flow Rate	**60**	gpm
Thickener Solids Throughput	4,804	lb TSS/ day
Thickener Solids Throughput	**240**	lbs TSS/hour

CONCLUSION:

Solids system is limited at 60 gpm through screw press

OBJECTIVE: Calculate the MM Influent WW Capacity associated with Solids System Limits
Option 3 - Screw press operates at 24 hours per day 7 days per week.

GIVEN: **Projected Loads/ Flow**

Volume of WAS Tank	172340	gal
1.5 HRT in Feed Tank	63000	gal sludge per day
Screw Press Hydraulic Limit	60	gpm
Screw Press Solids Limit	255	lbs/hr

Parameter	Flow (MGD)	Influent Conc (mg/l)	Influent BOD (ppd)	Effluent Conc (mg/l)	Effluent BOD (ppd)
Max. Month Loading (ppd)	2.1	330.0	5,642	10	171

Biosolids Yield	0.90	lb VSS/ lb BOD influent
WAS Volatile Fraction	0.85	lb VSS/ lb TSS
Total WAS Yield	1.06	
WAS Concentration	8,000	mg/L
	0.8%	
TWAS Feed	8,000	mg/L
	0.8%	

CALCULATIIONS:

1) Calculate the volume of sludge wasted per day and the thickened volume fed to stabilization process

Max. Month Load			
Total WAS Load Gen.	5,793	lb TSS/ day	*- (BOD in - BOD out) * Total WAS Yield*
Total Volatile Suspended Solids	4,924	lb VSS/day	
Total WAS Volume	86,824	gal WAS/ day	*Volume stored in WAS storage tank*
Total TWAS Feed Volume	86,824	gal/day	
Filtrate Side Stream	0	gal/day	

2) Calculate the Screw Press Design Criteria

Number of thickener in operation	1	
Days of thickener operation	7	days/week
Hours of thickener operation	24	hours/day

Max Month Load		
Thickener Flow Rate	**60**	gpm
Thickener Solids Throughput	5,793	lb TSS/ day
Thickener Solids Throughput	**241**	lbs TSS/hour

CONCLUSION:

Solids system is limited at 60 gpm through screw press

OBJECTIVE: Calculate the MM Influent WW Capacity associated with Solids System Limits
Option 4 - Screw Press doesn't operate - liquid haul 2% solids out of feed tank.

GIVEN: **Projected Loads/ Flow**

Volume of WAS Tank	172340	gal
1.5 HRT in Feed Tank	63000	gal sludge per day
Screw Press Hydraulic Limit	60	gpm
Screw Press Solids Limit	255	lbs/hr

Parameter	Flow (MGD)	Influent Conc (mg/l)	Influent BOD (ppd)	Effluent Conc (mg/l)	Effluent BOD (ppd)
Max. Month Loading (ppd)	3.7	330.0	10,183	10	309

Biosolids Yield	0.90	lb VSS/ lb BOD influent
WAS Volatile Fraction	0.85	lb VSS/ lb TSS
Total WAS Yield	1.06	
WAS Concentration	8,000	mg/L
	0.8%	
TWAS Feed	20,000	mg/L
	2.0%	

CALCULATIIONS:

1) **Calculate the volume of sludge wasted per day and the thickened volume fed to stabilization process**

Max. Month Load			
Total WAS Load Gen.	10,455	lb TSS/ day	*- (BOD in - BOD out) * Total WAS Yield*
Total Volatile Suspended Solids	8,887	lb VSS/day	
Total WAS Volume	156,706	gal WAS/ day	*Volume stored in WAS storage tank*
Total TWAS Feed Volume	62,682	gal/day	
Filtrate Side Stream	94,024	gal/day	

CONCLUSION:

Solids system is limited at 1.5 day HRT in Feed Tank (63,000 gal of sludge)

OBJECTIVE: Calculate the MM Influent WW Capacity associated with Solids System Limits
Option 5 - Screw Press doesn't operate - liquid haul 3% solids out of feed tank.

GIVEN: **Projected Loads/ Flow**

Volume of WAS Tank	172340	gal
1.5 HRT in Feed Tank	63000	gal sludge per day
Screw Press Hydraulic Limit	60	gpm
Screw Press Solids Limit	255	lbs/hr

Parameter	Flow (MGD)	Influent Conc (mg/l)	Influent BOD (ppd)	Effluent Conc (mg/l)	Effluent BOD (ppd)
Max. Month Loading (ppd)	4.0	330.0	11,009	10	334

Biosolids Yield	0.90	lb VSS/ lb BOD influent
WAS Volatile Fraction	0.85	lb VSS/ lb TSS
Total WAS Yield	1.06	
WAS Concentration	8,000	mg/L
	0.8%	
TWAS Feed	30,000	mg/L
	3.0%	

CALCULATIIONS:

1) **Calculate the volume of sludge wasted per day and the thickened volume fed to stabilization process**

Max. Month Load

Total WAS Load Gen.	11,303	lb TSS/ day	*- (BOD in - BOD out) * Total WAS Yield*
Total Volatile Suspended Solids	9,608	lb VSS/day	
Total WAS Volume	169,412	gal WAS/ day	*Volume stored in WAS storage tank*
Total TWAS Feed Volume	45,176	gal/day	
Filtrate Side Stream	124,235	gal/day	

CONCLUSION:

Solids system is limited by WAS tank volume of 170,000 gal

THIS PAGE INTENTIONALLY LEFT BLANK

This spreadsheet is the summary of the building blocks that make up the alternatives. The alternative costs are summarzed below.

Short Term Building Blocks

Short Term Improvements - 2023 (1.99 MGD, 5372 ppd BOD, 596 ppd NH3)

MMDF	1.99	MGD
South Plant Flow	0.9	MGD
North Plant Flow	1.09	MGD
WAS Production with alum sludge, (ppd)	7520	ppd
WAS Production with alum sludge, (gpd)	100130	gpd
WAS Production without alum sludge (ppd)	6016	ppd
WAS Production without alum sludge (gpd)	80100	gpd

	ppd	gpd
South Plant WAS	3401	45285
North Plant WAS	4119	54845
South Plant WAS	2721	36226
North Plant WAS	3295	43874

			Capital	O&M	Total
	South Plant				
ST1	SWRF ST L1	SWRF treats 0.9 MGD, 2430 ppd BOD, 270 ppd NH3 to ammonia only	$ 133,800	$ 3,896,803	$ 4,030,603
ST1	SWRF ST S1	SWRF produces class B 1.5% liquid with aerobic digestion	$ 29,300	$ 3,526,114	$ 3,555,414
	North Plant				
ST1&2	NWRF ST L1	NWRF treats 1.09 MGD, 2942 ppd BOD, 326 ppd NH3 to TIN<10	$ -	$ 6,536,597	$ 6,536,597
ST1&2	NWRF ST S1	NWRF produces class A cake with FKC process for 55% of solids	$ 207,575	$ 2,859,575	$ 3,067,150
ST2	NWRF ST S2	NWRF produces class B liquid with lime stabilization for 55% of solids	$ 207,575	$ 3,777,413	$ 3,984,988
ST3	NWRF ST L2	NWRF treats 1.99 MGD, 5372 ppd BOD, 596 ppd NH3 to TIN<10	$ 1,680,725	$ 6,895,661	$ 8,576,386
ST3	NWRF ST S3	NWRF produces class B liquid with lime stabilization for 100% of solids	$ 450,225	$ 4,673,529	$ 5,123,754
ST4	NWRF ST S4	NWRF produces class B liquid and Class A Cake with lime stabilization	$ 450,225	$ 2,962,204	$ 3,412,429
	WTP				
STLT S5	WTP STLT S1	WTP installs two screw presses to dewater solids starting in 2019	$ 1,680,495	$ 1,370,073	$ 3,050,568

Long Term Building Blocks

Long Term Improvements - 2029 (2.5 MGD, 6798 ppd BOD, 754 ppd NH3)

MMDF
South Plant Flow
North Plant Flow
WAS Production without alum sludge (ppd)
WAS Production without alum sludge (gpd)

			Capital	O&M	Total
	South Plant				
LT1&2	SWRF LT L1	SWRF treats 1.3 MGD, 3959 ppd BOD, 392 ppd NH3 for TIN<10	$ 3,681,610	$ 3,812,852	$ 7,494,462
LT1&2	SWRF LT S1	SWRF produces class B liquid with aerobic digestion for 52% of solids	$ 1,129,760	$ 1,724,700	$ 2,854,460
LT7	SWRF LT L2	SWRF used as EQ	$ 201,940	$ 772,000	$ 973,940
					$ -
	North Plant				$ -
LT1&2	NWRF LT L1	NWRF treats 1.2 MGD, 3655 ppd BOD, 362 ppd NH3 for TIN<10	$ -	$ 4,494,307	$ 4,494,307
LT1	NWRF LT S1	NWRF produces class A Cake from FKC screw press for 48% of solids	$ -	$ 1,485,624	$ 1,485,624
LT2	NWRF LT S2	NWRF produces class B liquid with lime stabilization for 48% solids	$ 207,575	$ 2,545,811	$ 2,753,386
LT3	NWRF LT L2	NWRF treats 2.5 MGD, 6798 ppd BOD, 754 ppd NH3 for TIN<10	$ 641,010	$ 4,930,697	$ 5,571,707
LT3	NWRF LT S3	NWRF produces class A cake with FKC screw press for 100% of solids	$ 1,468,205	$ 2,316,257	$ 3,784,462
LT4	NWRF LT S4	NWRF produces class B cake with aerobic digestion for 100% of solids	$ 3,486,915	$ 3,981,359	$ 7,468,274
LT5	NWRF LT S5	NWRF produces class B liquid with lime stabilization for 100% of solids	$ 455,285	$ 3,649,117	$ 4,104,402
LT6	NWRF LT S6	NWRF produces class A cake with Schwing lime stabilization for 100% of solids	$ 2,035,270	$ 3,327,762	$ 5,363,032

Short Term	Capital	O&M	Total NPW
Alternative 1 - SWRF and NWRF split flow and solids (NWRF produces cake)	$ 370,675	$ 16,819,089	$ 17,189,764
Alternative 2 - SWRF and NWRF split flow and solids (NWRF produces liquid)	$ 370,675	$ 17,736,927	$ 18,107,602
Alternative 3 - NWRF treats 1.99 MGD and produces liquid lime sludge	$ 2,130,950	$ 11,569,190	$ 13,700,140
Alternative 4 - NWRF treats 1.99 MGD and produces cake and liquid sludge	$ 2,130,950	$ 9,857,865	$ 11,988,815
Long Term	**Capital**	**O&M**	**Total NPW**
Alternative 1 - SWRF and NWRF split flow and solids (NWRF produces cake)	$ 4,811,370	$ 11,517,484	$ 16,328,854
Alternative 2 - SWRF and NWRF split flow and solids (NWRF produces liquid)	$ 5,018,945	$ 12,577,671	$ 17,596,616
Alternative 3 - NWRF treats 2.5 MGD and produces cake with FKC process	$ 2,109,215	$ 7,246,954	$ 9,356,169
Alternative 4 - NWRF treats 2.5 MGD and produces cake from aerobic digestion	$ 4,127,925	$ 8,912,056	$ 13,039,981
Alternative 5 - NWRF treats 2.5 MGD and produces liquid lime sludge	$ 1,096,295	$ 8,579,814	$ 9,676,109
Alternative 6 - NWRF treats 2.5 MGD and produces cake from SCHWING process	$ 2,676,280	$ 8,258,459	$ 10,934,739
Alternative 7 - SWRF used as EQ	$ 201,940	$ 772,000	$ 973,940

	Alternative ST 1	Alternative ST 2	Alternative ST 3	Alternative ST 4
Alternative LT 1	$ 5,182,100 $ 29,706,700 $ 34,888,800	$ 5,182,100 $ 30,624,500 $ 35,806,600		
Alternative LT 2	$ 5,182,100 $ 30,766,900 $ 35,949,000	$ 5,182,100 $ 31,684,700 $ 36,866,800		
Alternative LT 3	$ 4,160,700 $ 24,169,100 $ 28,329,800	$ 4,160,700 $ 26,354,000 $ 30,514,700	$ 4,240,200 $ 20,186,300 $ 24,426,500	$ 4,240,200 $ 18,474,900 $ 22,715,100
Alternative LT 4	$ 6,179,400 $ 25,731,200 $ 31,910,600	$ 6,179,400 $ 26,649,000 $ 32,828,400	$ 6,258,900 $ 20,481,300 $ 26,740,200	$ 6,258,900 $ 18,770,000 $ 25,028,900
Alternative LT 5	$ 3,147,700 $ 26,769,000 $ 29,916,700	$ 3,147,700 $ 27,686,900 $ 30,834,600	$ 3,227,300 $ 21,519,100 $ 24,746,400	$ 3,227,300 $ 19,807,800 $ 23,035,100
Alternative LT 6	$ 4,727,700 $ 26,447,700 $ 31,175,400	$ 4,727,700 $ 27,365,500 $ 32,093,200	$ 4,807,300 $ 21,197,800 $ 26,005,100	$ 4,807,300 $ 19,486,400 $ 24,293,700

Population and Influent Growth Projection

	MMDF	MMBOD	MMNH3	Population Growth								
2010	**1.09**	**2960**	412		**325.42**							
2012	**1.16**	**2722**	337	3.16%	**281.19**				1.12 yield was described in WUP for Yield			
2013	**1.24**	**3139**	381	6.90%	**303.35**			1.12	1.4 yield calculated from 2012 and 2013 da			
2014	1.31	3565	395	6%	**325.00**	36.05			Alum	No alum	No alum Ga	Alum Sludg
2015	1.39	3779	419	6%					5290	4232	56350	2140
2016	1.48	4005	444	6%					5608	4486	59731	2268.4
2017	1.57	4246	471	6%					5944	4755	63315	2404.5
2018	1.63	4416	490	4%					6182	4945	65847	2500.68
2019	1.69	4592	509	4%					6429	5143	68481	2600.71
2020	1.76	4776	530	4%					6686	5349	71220	2704.74
2021	1.83	4967	551	4%			Peak Hour Flows		6954	5563	74069	2812.93
2022	1.90	5166	573	4%		AADF	PH Fact	PHF	7232	5785	77032	2925.45
2023	1.98	5372	596	4%		1.73	3.33	5.77109	7521	6017	80113	3042.46
2024	2.06	5587	620	4%		1.80			7822	6258	83318	3164.16
2025	2.14	5811	645	4%		1.87			8135	6508	86650	3290.73
2026	2.23	6043	670	4%		1.95			8460	6768	90116	3422.36
2027	2.32	6285	697	4%		2.03			8799	7039	93721	3559.25
2028	2.41	6536	725	4%		2.11			9151	7320	97470	3701.62
2029	2.51	6798	754	4%		2.19	3.20	7.02086	9517	7613	101369	3849.69
2030	2.61	7069	784	4%		2.28						
2031	2.71	7352	816	4%		2.37						
2032	2.82	7646	848	4%		2.47						
2033	2.93	7952	882	4%		2.57						
2034	3.05	8270	917	4%		2.67						
2035	3.17	8601	954	4%		2.77						
2036	3.30	8945	992	4%		2.89						
2037	3.43	9303	1032	4%		3.00						
2038	3.57	9675	1073	4%		3.12						
2039	3.71	10062	1116	4%		3.25						
2040	3.86	10465	1161	4%		3.38						
2041	4.01	10883	1207	4%		3.51						
2042	4.17	11318	1255	4%		3.65						
2043	4.34	11771	1306	4%		3.80						
2044	4.51	12242	1358	4%		3.95						
2045	4.69	12732	1412	4%		4.11						
2046	4.88	13241	1469	4%		4.27						
2047	5.08	13771	1527	4%		4.44						
2048	5.28	14321	1589	4%		4.62						
2049	5.49	14894	1652	4%		4.81	2.81	13.4948		20852.1	16681.7	277639
2050	5.71	15490	1718	4%		5.00						

Input Data

		Short Term 2023	Long Term 2029	
Adjusted Interest Rate	2.90%			Difference between 30 yr ave. Federal Overnight Fund a
Years to Future Date		8	14	
Consumables Rate Increase	3.65%			Based on 30yr avg inflation rate
Energy Rate Increase	3.40%			Based on Historical energy rate cost increase in Colorad
Solids Hauling Rate Increase	4.20%			Based on Historical Diesel fuel cost increase
Liquid Hauling Rate Increase	4.20%			Based on Historical Diesel fuel cost increase

	In today's $	F/P in 2023	F/P in 2029	
Cost of Energy	$ 0.09	$ 0.118	$ 0.144	per kwh
Polymer Costs	$ 1.32	$ 1.76	$ 2.18	per pound neat
Class A Solids Hauling and Disposal	$ 19	$ 33.80	$ 33.80	$/wet ton
Class B Solids Hauling and Disposal	$ 25	$ 25.00	$ 44.47	$/wet ton
Unclassified Solids Hauling and Disposal	$ 45	$ 62.54	$ 80.05	
Class A Liquid Hauling and Disposal	$ 0.038	$ 0.05	$ 0.07	$/gal
Class B Liquid Hauling and Disposal	$ 0.042	$ 0.06	$ 0.07	$/gal
Unclassified Liquid Hauling and Disposal	$ 0.150	$ 0.21	$ 0.27	
Full Time Employee Cost	$ 45,000	$ 56,563	$ 67,147	per FTE
Lime Cost	$ 222	$ 296	$ 367	per ton

Construction Prorates	18%
Contractor Overhead and Profit	15%
Design Contingency	20%
Engineering Fee	15%

O&M Costs for SWRF 2010 per Jon Mays		**Liquid**	**Solids**	
Total Annual Cost	$ 640,000			
Option 1 - Operations Staff	$ 160,000	$ 152,000	$ 8,000	5% devoted to solids
Option 2 - Contract Operator	$ 144,000	$ 136,800	$ 7,200	12,000 per month per Wayne Ramey
Electricity	$ 162,000	$ 108,054	$ 53,946	33% devoted to solids
Liquid Haul	$ 132,000		$ 132,000	100% devoted to solids
Other	$ 186,000	$ 186,000		100% devoted to liquid

O&M Costs for NWRF 2012 per Jon Mays		**Liquid**	**Solids**	
Total Annual Cost	$ 995,000			
Operations Staff	$ 260,000	$ 221,000	$ 39,000	15% devoted to solids
Electricity	$ 230,000	$ 153,410	$ 76,590	33% devoted to solids
Chemical Costs	$ 190,000		$ 190,000	100% devoted to solids
Gas Costs	$ 30,000	$ 5,000	$ 25,000	
Other	$ 285,000	$ 285,000		100% devoted to liquid

OBJECTIVE: Calculate the Capital and O&M costs associated with alternative operation

GIVEN: Short Term Improvements - 2023 (1.99 MGD, 5372 ppd BOD, 596 ppd NH3)
SWRF treats 0.9 MGD, 2430 ppd BOD, 270 ppd NH3 to ammonia only
SWRF ST L1

O&M Costs for SWRF 2010 per Jon Mays		Liquid	Solids	
Total Annual Cost	$ 640,000	$ -	$ -	0
Option 1 - Operations Staff	$ 160,000	$ 152,000	$ 8,000	5% devoted to solids
Option 2 - Contract Operator	$ 144,000	$ 136,800	$ 7,200	12,000 per month per Wayne Ramey
Electricity	$ 162,000	$ 108,054	$ 53,946	33% devoted to solids
Liquid Haul	$ 132,000	$ -	$ 132,000	100% devoted to solids
Other	$ 186,000	$ 186,000	$ -	100% devoted to liquid

Average 2010 SWRF flows were 1.007 MGD which is close to 0.9MGD used in this alternative. Use 2010 O&M costs for this alternative and assume the digested solids meet Class B standards

CALCULATIONS:

SWRF ST L1

Capital Costs

See Opinion of Probable Costs Worksheet

Assume Town does preparation of SWRF for continued operation

Total Capital Costs **$133,800**

Annual O&M Costs

Assume staff, electric, and other cost are similar to cost in 2010 for 0.9 MGD influent flow

Year	Electric Cost	Staff	Other Costs	Chemical	O&M Cost	P/F
2015	$ 108,054	$ 136,800	$ 186,000		$ 430,854	$ 430,854
2016	$ 111,728	$ 140,767	$ 191,394		$ 443,889	$ 431,379
2017	$ 115,527	$ 144,849	$ 196,944		$ 457,320	$ 431,907
2018	$ 119,454	$ 149,050	$ 202,656		$ 471,160	$ 432,437
2019	$ 123,516	$ 153,373	$ 208,533		$ 485,421	$ 432,970
2020	$ 127,715	$ 157,820	$ 214,580		$ 500,116	$ 433,505
2021	$ 132,058	$ 162,397	$ 220,803		$ 515,258	$ 434,043
2022	$ 136,548	$ 167,107	$ 227,206		$ 530,861	$ 434,583
2023	$ 141,190	$ 171,953	$ 233,795		$ 546,939	$ 435,126

Total NPW O&M Costs **$3,896,803** 2015 - 2023 only

CONCLUSION:

Present Worth Analysis

Years Considered in NPV 8 yrs
Interest Rate used for NPV 2.90%

Cost Type	Year	Total Cost	Discount Factor	Present Value
Capital Cost	0	$ 133,800	1.00	$ 133,800
Total O&M Cost				$ 3,896,803
Net Present Worth				**$ 4,031,000**

Opinion of Probable Construction Costs

Short Term Improvements - 2023 (1.99 MGD, 5372 ppd BOD, 596 ppd NH3)
SWRF treats 0.9 MGD, 2430 ppd BOD, 270 ppd NH3 to ammonia only
SWRF ST L1

Division	Description	Quantity	Units	Cost per Unit ($)	Installation Multiplier	Cost (nearest $100)
1	**GENERAL CONDITIONS**					**26,500**
	Clean tanks/pumps/equipment	1	LS	25,000	1.0	25,000
	Seed process from NWRF	1	LS	1,500	1.0	1,500
11	**EQUIPMENT**					**34,500**
	New diffusers for aeration tanks (USA Bluebook cost)	608	EA	31	1.3	24,500
	Service pumps/ headworks equipment	1	EA	10,000	1.0	10,000
16	**ELECTRICAL and INSTRUMENTATION & CONTROLS**					**22,800**
	New process DO probes (Endress Hauser from Bluebook)	4	EA	1,500	1.3	7,800
	Integrate SCADA Systems	1	LS	15,000	1.0	15,000
					SUBTOTAL 1	**83,800**
	CONSTRUCTION PRORATES(See Note 1)	18.0%	of Subtotal 1	15,084	1.0	15,100
	CONTRACTOR'S OVERHEAD & PROFIT (See Note 2)	15.0%	of Subtotal 1	12,570	1.0	12,600
					SUBTOTAL 2	**111,500**
	CONTINGENCY (See Note 4)	20.0%	of Subtotal 2	22,300	1.0	22,300
					SUBTOTAL 3	**133,800**
	ENGINEERING COSTS			0		0
					TOTAL	**133,800**

Notes

1 Construction Prorates [(a) (b)] 18%

(a) General conditions includes cost associated with permits, licenses, insurance, environmental safe guards, sediment and drainage control, and special construction practices to maintain continued plant operations. Also includes misc construction materials needed for project not included above

2 Contractor's Overhead & Profit [(a)] 15.0%

(a) Contractor's overhead and profit include costs for mobilization/demobilization, administration, and contractor/subcontractor overhead costs and profits.

4 Design Contingency [(a)] 20.0%

(a) The design continency is added to the subtotal based on the conceptual nature of information developed for this evaluation.

5 Engineering Costs 15%

Costs incurred during Final Design and Construction

OBJECTIVE: Calculate the Capital and O&M costs associated with alternative operation

GIVEN: Short Term Improvements - 2023 (1.99 MGD, 5372 ppd BOD, 596 ppd NH3)
SWRF produces class B 1.5% liquid with aerobic digestion
SWRF ST S1

O&M Costs for SWRF 2010 per Jon Mays		Liquid	Solids	
Total Annual Cost	$ 640,000	$ -	$ -	0
Option 1 - Operations Staff	$ 160,000	$ 152,000	$ 8,000	5% devoted to solids
Option 2 - Contract Operator	$ 144,000	$ 136,800	$ 7,200	12,000 per month per Wayne Ramey
Electricity	$ 162,000	$ 108,054	$ 53,946	33% devoted to solids
Liquid Haul	$ 132,000	$ -	$ 132,000	100% devoted to solids
Other	$ 186,000	$ 186,000	$ -	100% devoted to liquid

Average 2010 SWRF flows were 1.007 MGD which is close to 0.9MGD used in this alternative. Use 2010 O&M costs for this alternative and assume the digested solids meet Class B standards

	With Alum sludge		Without Alum sludge	
	ppd	gpd	ppd	gpd
Biosolids Production at SWRF 2023	3,401	45,285	2,721	36,226

Check Digester Volume Required
Use equation 14-22 on page 1537 Metcalf and Eddy

Daily Flow Rate to Digester	45285	gpd	
Daily Solids Rate to Digester	3401		
Influent TSS	7500	mg/l	
Cake concentration	15000	mg/l	
Reaction Rate Constant	0.05	d^-1	from metcalf and eddy
VSS/TSS in Digester	0.8		
SRT required	60	days	
Volume Required =	399,573	gallons	The aerobic digesters have a total vol of 370000

The existing Aerobic digesters have insufficient volume to meet 60 day SRT with Alum Sludge in 2023
The existing Aerobic digesters have sufficient volume to meet 60 day SRT without Alum Sludge in 2023
Assume WTP stops discharging Alum Sludge to NWRF after 4 years

CALCULATIONS:

Capital Costs

See Opinion of Probable Costs Worksheet
Assume Town does preparation of SWRF for continued operation

Total Capital Costs **$29,300**

Total Influent Flow	1.99
SWRF	0.9
NWRF	1.09

Annual O&M Costs

Assume staff, electric, and other cost are similar to cost in 2010 for0.9 MGD influent flow

Year	Electric Cost	Staff	Solids Disp	Chemical	O&M Cost	P/F
2015	$ 53,946	$ 7,200	$ 293,012		$ 354,158	$ 354,158
2016	$ 55,780	$ 7,409	$ 323,637		$ 386,826	$ 375,925
2017	$ 57,677	$ 7,624	$ 357,464		$ 422,764	$ 399,271
2018	$ 59,638	$ 7,845	$ 387,377		$ 454,859	$ 417,475
2019	$ 61,665	$ 8,072	$ 335,834		$ 405,571	$ 361,748
2020	$ 63,762	$ 8,306	$ 363,936		$ 436,005	$ 377,933
2021	$ 65,930	$ 8,547	$ 394,391		$ 468,868	$ 394,965
2022	$ 68,172	$ 8,795	$ 427,393		$ 504,360	$ 412,889
2023	$ 70,489	$ 9,050	$ 463,157		$ 542,697	$ 431,752

1.50% Concentratior			PPD at each plant										
Sludge Produced (ppd)			SWRF		NWRF		Liquid to Haul		SWRF	45%	NWRF	55%	
Alum	No alum	Alum	No alum	Alum	No alum	Alum	No Alum	Alum	No Alum	Alum	No Alum	Liquid Haul Cost
5290	4232	2393	1914	2898	2318	42262	33810	19114	15291	23149	18519	$ 0.042
5608	4486	2536	2029	3071	2457	44798	35838	20260	16208	24538	19630	$ 0.044
5944	4755	2688	2151	3256	2605	47486	37989	21476	17181	26010	20808	$ 0.046
6182	4945	2796	2237	3386	2709	49385	39508	22335	17868	27050	21640	$ 0.048
6429	5143	2908	2326	3521	2817	51361	41089	23229	18583	28132	22506	$ 0.050
6686	5349	3024	2419	3662	2930	53415	42732	24158	19326	29258	23406	$ 0.052
6954	5563	3145	2516	3809	3047	55552	44441	25124	20099	30428	24342	$ 0.054
7232	5785	3271	2617	3961	3169	57774	46219	26129	20903	31645	25316	$ 0.056
7521	6017	3402	2721	4120	3296	60085	48068	27174	21739	32911	26329	$ 0.058

Total NPW O&M Costs **$3,526,114** 2015 - 2023 only

CONCLUSION:

Present Worth Analysis

Years Considered in NPV	8 yrs
Interest Rate used for NPV	2.90%

Cost Type	Year	Total Cost	Discount Factor	Present Value
Capital Cost	0	$ 29,300	1.00	$ 29,300
Total O&M Cost				$ 3,526,114
Net Present Worth				**$ 3,556,000**

Opinion of Probable Construction Costs

Short Term Improvements - 2023 (1.99 MGD, 5372 ppd BOD, 596 ppd NH3)
SWRF produces class B 1.5% liquid with aerobic digestion
SWRF ST S1

Division	Description	Quantity	Units	Cost per Unit ($)	Installation Multiplier	Cost (nearest $100)
1	**GENERAL CONDITIONS**					**20,000**
	Clean tanks/pumps/equipment	1	LS	20,000	1.0	20,000
						0
11	**EQUIPMENT**					**4,400**
	New Diffusers for Digesters	96	EA	35	1.3	4,400
						0
16	**ELECTRICAL and INSTRUMENTATION & CONTROLS**					**0**
						0
					SUBTOTAL 1	**24,400**
	CONSTRUCTION PRORATES(See Note 1)	0.0%	of Subtotal 1	0	1.0	0
	CONTRACTOR'S OVERHEAD & PROFIT (See Note 2)	0.0%	of Subtotal 1	0	1.0	0
					SUBTOTAL 2	**24,400**
	CONTINGENCY (See Note 4)	20.0%	of Subtotal 2	4,880	1.0	4,900
					SUBTOTAL 3	**29,300**
	ENGINEERING COSTS			0	1.0	0
					TOTAL	**29,300**

Notes

1 Construction Prorates [(a) (b)] 18%

(a) General conditions includes cost associated with permits, licenses, insurance, environmental safe guards, sediment and drainage control, and special construction practices to maintain continued plant operations. Also includes misc construction materials needed for project not included above

2 Contractor's Overhead & Profit [(a)] 15.0%

(a) Contractor's overhead and profit include costs for mobilization/demobilization, administration, and contractor/subcontractor overhead costs and profits.

4 Design Contingency [(a)] 20.0%

(a) The design continency is added to the subtotal based on the conceptual nature of information developed for this evaluation.

5 Engineering Costs 15%

Costs incurred during Final Design and Construction

OBJECTIVE: Calculate the Capital and O&M costs associated with alternative operation

GIVEN: Short Term Improvements - 2023 (1.99 MGD, 5372 ppd BOD, 596 ppd NH3)
NWRF treats 1.09 MGD, 2942 ppd BOD, 326 ppd NH3 to TIN<10
NWRF ST L1

O&M Costs for NWRF 2012 per Jon Mays		Liquid	Solids	
Total Annual Cost	$ 995,000	$ -	$ -	0
Operations Staff	$ 260,000	$ 221,000	$ 39,000	15% devoted to solids
Electricity	$ 230,000	$ 153,410	$ 76,590	33% devoted to solids
Chemical Costs	$ 190,000	$ -	$ 190,000	100% devoted to solids
Gas Costs	$ 30,000	$ 5,000	$ 25,000	0
Other	$ 285,000	$ 285,000	$ -	100% devoted to liquid

Average influent flow for 2012 to NWRF was 1.08MGD which is close to 1.09 MGD used in this alternative. Use 2012 O&M costs for this alternative and assume the FKC press can continue to produce a Class A product.

CALCULATIONS:

Capital Costs

See Opinion of Probable Costs Worksheet
Assume no capital cost for continued operation of NWRF at 1.09 MGD

Total Capital Costs **$0**

Annual O&M Costs

Assume staff, electric, and other cost are similar to cost in 2012 for 1.09 MGD influent flow
Assume in 2017 another operator is hired

Year	Electric Cost	Staff	Other	Gas Costs	O&M Cost	P/F
2015	$ 153,410	$ 221,000	$ 285,000	$ 5,000	$ 664,410	$ 664,410
2016	$ 158,626	$ 227,409	$ 293,265	$ 5,170	$ 684,470	$ 665,180
2017	$ 164,019	$ 314,004	$ 301,770	$ 5,346	$ 785,139	$ 741,508
2018	$ 169,596	$ 323,110	$ 310,521	$ 5,528	$ 808,754	$ 742,285
2019	$ 175,362	$ 332,480	$ 319,526	$ 5,715	$ 833,084	$ 743,066
2020	$ 181,324	$ 342,122	$ 328,792	$ 5,910	$ 858,149	$ 743,851
2021	$ 187,489	$ 352,044	$ 338,327	$ 6,111	$ 883,971	$ 744,639
2022	$ 193,864	$ 362,253	$ 348,139	$ 6,318	$ 910,574	$ 745,432
2023	$ 200,456	$ 372,758	$ 358,235	$ 6,533	$ 937,982	$ 746,228

Total NPW O&M Costs **$6,536,597** 2015 - 2023 only

CONCLUSION:

Present Worth Analysis

Years Considered in NPV 8 yrs
Interest Rate used for NPV 2.90%

Cost Type	Year	Total Cost	Discount Factor	Present Value
Capital Cost	0	$ -	1.00	$ -
Annual O&M Cost	1-x	$6,536,597	7.05	$ 6,536,597
Net Present Worth				**$ 6,537,000**

OBJECTIVE: Calculate the Capital and O&M costs associated with alternative operation

GIVEN: Short Term Improvements - 2023 (1.99 MGD, 5372 ppd BOD, 596 ppd NH3)
NWRF produces class A cake with FKC process for 55% of solids
NWRF ST S1

O&M Costs for NWRF 2012 per Jon Mays		Liquid	Solids	
Total Annual Cost	$ 995,000	$ -	$ -	0
Operations Staff	$ 260,000	$ 221,000	$ 39,000	15% devoted to solids
Electricity	$ 230,000	$ 153,410	$ 76,590	33% devoted to solids
Chemical Costs	$ 190,000	$ -	$ 190,000	100% devoted to solids
Gas Costs	$ 30,000	$ 5,000	$ 25,000	0
Other	$ 285,000	$ 285,000	$ -	100% devoted to liquid

Average influent flow for 2012 to NWRF was 1.08MGD which is close to 1.09 MGD used in this alternative. Use 2012 O&M costs for this alternative and assume the FKC press can continue to produce a Class A product.

Total Influent Flow	1.99
SWRF	0.9
NWRF	1.09
Cake %	30%

Lime Usage Winter	553	lbs/DT	Polymer Usage Winter	178 lbs/DT
Lime Usage Summer	1318	lbs/DT	Polymer Usage Summer	0 lbs/DT
Lime no Alum	300	lbs/DT	Polymer no Alum	40 lbs/DT

CALCULATIONS:

Capital Costs

See Opinion of Probable Costs Worksheet
Assume no additional capital costs for existing NWRF solids system

Total Capital Costs **$207,575**

Annual O&M Costs

Assume Cake for 6 months and Liquid for 6 months until 2019 when WTP stops sending Alum Sludge (30% cake)
Assume staff, electric, and other cost are similar to cost in 2012 for 1.09 MGD influent flow

Year	Electric and Gas Cost	Staff	Solids Disp	Chemical	O&M Cost	P/F
2015	$ 101,590	$ 39,000	$ 127,837	$ 117,039	$ 385,466	$ 385,466
2016	$ 105,044	$ 40,131	$ 141,199	$ 128,589	$ 414,963	$ 403,268
2017	$ 108,616	$ 41,295	$ 155,957	$ 141,280	$ 447,147	$ 422,298
2018	$ 112,308	$ 42,492	$ 169,007	$ 152,294	$ 476,102	$ 436,972
2019	$ 116,127	$ 43,725	$ 49,000	$ 51,092	$ 259,944	$ 231,856
2020	$ 120,075	$ 44,993	$ 53,101	$ 55,076	$ 273,244	$ 236,850
2021	$ 124,158	$ 46,297	$ 57,544	$ 59,369	$ 287,369	$ 242,074
2022	$ 128,379	$ 47,640	$ 62,360	$ 63,998	$ 302,377	$ 247,537
2023	$ 132,744	$ 49,022	$ 67,578	$ 68,987	$ 318,330	$ 253,253

Total NPW O&M Costs **$2,859,575** 2015 - 2023 only

	2.50%Concentratior		PPD at each plant												Cake and liquid				Lime Cost			Polymer Cost		
	Sludge Produced (ppd)		SWRF (ppd)		NWRF (ppd)		ppd	Liquid to Haul (gpd)		SWRF (gpd) 45%		NWRF (gpd) 55%		NWRF				NWRF			NWRF		
Year	Alum	No alum	Alum	No alum	Alum	No alum	Lime added	Alum	No Alum	Alum	No Alum	Alum	No Alum	Summer	Winter	$/WT	$/gal	Summer	Winter	$/Ton	Summer	Winter	$/lb
2015	5290	4232	2393	1914	2898	2318	801	25357	20286	11468	9175	13889	11111	$ 583	$ 117	$ 19	$ 0.042	$ 212	$ 89	222	$ -	$ 340	$ 1.32
2016	5608	4486	2536	2029	3071	2457	849	26879	21503	12156	9725	14723	11778	$ 644	$ 129	$ 20	$ 0.044	$ 233	$ 98	230	$ -	$ 374	$ 1.37
2017	5944	4755	2688	2151	3256	2605	900	28492	22793	12886	10309	15606	12485	$ 712	$ 143	$ 21	$ 0.046	$ 256	$ 107	239	$ -	$ 411	$ 1.42
2018	6182	4945	2796	2237	3386	2709	936	29631	23705	13401	10721	16230	12984	$ 771	$ 155	$ 21	$ 0.048	$ 276	$ 116	247	$ -	$ 443	$ 1.47
2019	6429	5143	2908	2326	3521	2817	779	30816	24653	13937	11150	16879	13504	$ 134	$ 134	$ 22	$ 0.050	$ 54	$ 54	256	$ 86	$ 86	$ 1.52
2020	6686	5349	3024	2419	3662	2930	810	32049	25639	14495	11596	17555	14044	$ 145	$ 145	$ 23	$ 0.052	$ 58	$ 58	266	$ 93	$ 93	$ 1.58
2021	6954	5563	3145	2516	3809	3047	843	33331	26665	15074	12060	18257	14605	$ 158	$ 158	$ 24	$ 0.054	$ 63	$ 63	275	$ 100	$ 100	$ 1.64
2022	7232	5785	3271	2617	3961	3169	876	34664	27731	15677	12542	18987	15190	$ 171	$ 171	$ 25	$ 0.056	$ 68	$ 68	285	$ 108	$ 108	$ 1.70
2023	7521	6017	3402	2721	4120	3296	911	36051	28841	16304	13044	19746	15797	$ 185	$ 185	$ 26	$ 0.058	$ 73	$ 73	296	$ 116	$ 116	$ 1.76

CONCLUSION:

Present Worth Analysis

Years Considered in NPV	8 yrs
Interest Rate used for NPV	2.90%

Cost Type	Year	Total Cost	Discount Factor	Present Value
Capital Cost	0	$ 207,575	1.00	$ 207,575
Total O&M Cost				$ 2,859,575
Net Present Worth				**$ 3,068,000**

Opinion of Probable Construction Costs

Short Term Improvements - 2023 (1.99 MGD, 5372 ppd BOD, 596 ppd NH3)
NWRF produces class A cake with FKC process for 55% of solids
NWRF ST S1

Division	Description	Quantity	Units	Cost per Unit ($)	Installation Multiplier	Cost (nearest $100)
3	**CONCRETE**					**0**
	Concrete area around sludge load out station	1	LS	10,000	1.0	10,000
11	**EQUIPMENT**					**83,000**
	New submersible feed pumps to pump sludge to truck	1	EA	14,600	1.3	19,000
	New pumps to pump supernatant back to head of plant	1	EA	14,600	1.3	19,000
	New sludge load out station	1	LS	5,000	1.0	5,000
	Floating Decanters for Feed Tanks	1	LS	40,000	1.0	40,000
14	**HOISTS AND CRANES**					**5,000**
	New Davit crane for pulling pumps	1	EA	5,000	1.0	5,000
15	**MECHANICAL / HVAC**					**10,000**
	Piping for pumps to load out station	1	LS	10,000	1.0	10,000
16	**ELECTRICAL and INSTRUMENTATION & CONTROLS**					**15,000**
	Electrical work to support pumps	1	LS	15,000	1.0	15,000
					SUBTOTAL 1	**113,000**
	CONSTRUCTION PRORATES(See Note 1)	18.0%	of Subtotal 1	20,340	1.0	20,400
	CONTRACTOR'S OVERHEAD & PROFIT (See Note 2)	15.0%	of Subtotal 1	16,950	1.0	17,000
					SUBTOTAL 2	**150,400**
	CONTINGENCY (See Note 4)	20.0%	of Subtotal 2	30,080	1.0	30,100
					SUBTOTAL 3	**180,500**
	ENGINEERING COSTS	15.0%	of Subtotal 3	27,075	1.0	27,075
					TOTAL	**207,575**

Notes

1 Construction Prorates [(a) (b)] — 18%

(a) General conditions includes cost associated with permits, licenses, insurance, environmental safe guards, sediment and drainage control, and special construction practices to maintain continued plant operations. Also includes misc construction materials needed for project not included above

2 Contractor's Overhead & Profit [(a)] — 15.0%

(a) Contractor's overhead and profit include costs for mobilization/demobilization, administration, and contractor/subcontractor overhead costs and profits.

4 Design Contingency [(a)] — 20.0%

(a) The design continency is added to the subtotal based on the conceptual nature of information developed for this evaluation.

5 Engineering Costs — 15%

Costs incurred during Final Design and Construction

OBJECTIVE: Calculate the Capital and O&M costs associated with alternative operation

GIVEN: Short Term Improvements - 2023 (1.99 MGD, 5372 ppd BOD, 596 ppd NH3)
NWRF produces class B liquid with lime stabilization for 55% of solids
NWRF ST S2

O&M Costs for NWRF 2012 per Jon Mays		Liquid	Solids	
Total Annual Cost	$ 995,000	$ -	$ -	0
Operations Staff	$ 260,000	$ 221,000	$ 39,000	15% devoted to solids
Electricity	$ 230,000	$ 153,410	$ 76,590	33% devoted to solids
Chemical Costs	$ 190,000	$ -	$ 190,000	100% devoted to solids
Gas Costs	$ 30,000	$ 5,000	$ 25,000	0
Other	$ 285,000	$ 285,000	$ -	100% devoted to liquid

Average influent flow for 2012 to NWRF was 1.08MGD which is close to 1.09 MGD used in this alternative. Use 2012 O&M costs for this alternative and assume the FKC press can continue to produce a Class A product.

Assume WTP stops discharging Alum Sludge to NWRF after 4 years

CALCULATIONS:

Capital Costs

See Opinion of Probable Costs Worksheet
Assume no additional capital costs for existing NWRF solids system

Total Capital Costs **$207,575**

Annual O&M Costs

(2) NWRF Operations Costs

Electric Costs	$ 76,590	per year
Operations Staff	$ 39,000	per year
Chemical Usage	$ 190,000	per year
Gas Usage	$ 25,000	per year

Total Influent Flow	1.99	Lime Usage Winter	553 lbs/DT	Polymer Usage Winter	0 lbs/DT
SWRF	0.9	Lime Usage Summer	1318 lbs/DT	Polymer Usage Summer	0 lbs/DT
NWRF	1.09	Lime no Alum	300 lbs/DT	Polymer no Alum	0 lbs/DT

Assume Liquid haul all year
Assume staff, electric, and other cost are similar to cost in 2012 for 1.09 MGD influent flow

Year	Electric and Gas Cost	Staff	Solids Disp	Chemical	O&M Cost	P/F
2015	$ 101,590	$ 39,000	$ 212,922	$ 54,913	$ 408,425	$ 408,425
2016	$ 105,044	$ 40,131	$ 235,177	$ 60,332	$ 440,684	$ 428,264
2017	$ 108,616	$ 41,295	$ 259,757	$ 66,286	$ 475,954	$ 449,505
2018	$ 112,308	$ 42,492	$ 281,494	$ 71,454	$ 507,749	$ 466,018
2019	$ 116,127	$ 43,725	$ 244,039	$ 19,760	$ 423,651	$ 377,874
2020	$ 120,075	$ 44,993	$ 264,460	$ 21,301	$ 450,829	$ 390,783
2021	$ 124,158	$ 46,297	$ 286,590	$ 22,962	$ 480,007	$ 404,348
2022	$ 128,379	$ 47,640	$ 310,572	$ 24,752	$ 511,343	$ 418,606
2023	$ 132,744	$ 49,022	$ 336,561	$ 26,681	$ 545,008	$ 433,591

	2.50% Concentratio		PPD at each plant												Liquid Haul Cost				Lime Cost			Polymer Cost		
	Sludge Produced (ppd)		SWRF		NWRF		Liquid to Haul		SWRF (gpd)		45% NWRF (gpd)		55%	NWRF				NWRF			NWRF		
Year	Alum	No alum	Alum	No alum	Alum	No alum	Alum	No Alum	Alum	No Alum	Alum	No Alum	Summer	Winter	$/WT	$/gal	Summer	Winter	$/Ton	Summer	Winter	$/lb
2015	5290	4232	2393	1914	2898	2318	25357	20286	11468	9175	13889	11111	$ 583	$ 583	$ -	$ 0.042	$ 211.96	$ 88.93	222	$ -	$ -	$ 1.32
2016	5608	4486	2536	2029	3071	2457	26879	21503	12156	9725	14723	11778	$ 644	$ 644	$ -	$ 0.044	$ 232.88	$ 97.71	230	$ -	$ -	$ 1.37
2017	5944	4755	2688	2151	3256	2605	28492	22793	12886	10309	15606	12485	$ 712	$ 712	$ -	$ 0.046	$ 255.86	$ 107.35	239	$ -	$ -	$ 1.42
2018	6182	4945	2796	2237	3386	2709	29631	23705	13401	10721	16230	12984	$ 771	$ 771	$ -	$ 0.048	$ 275.81	$ 115.72	247	$ -	$ -	$ 1.47
2019	6429	5143	2908	2326	3521	2817	30816	24653	13937	11150	16879	13504	$ 669	$ 669	$ -	$ 0.050	$ 54.14	$ 54.14	256	$ -	$ -	$ 1.52
2020	6686	5349	3024	2419	3662	2930	32049	25639	14495	11596	17555	14044	$ 725	$ 725	$ -	$ 0.052	$ 58.36	$ 58.36	266	$ -	$ -	$ 1.58
2021	6954	5563	3145	2516	3809	3047	33331	26665	15074	12060	18257	14605	$ 785	$ 785	$ -	$ 0.054	$ 62.91	$ 62.91	275	$ -	$ -	$ 1.64
2022	7232	5785	3271	2617	3961	3169	34664	27731	15677	12542	18987	15190	$ 851	$ 851	$ -	$ 0.056	$ 67.81	$ 67.81	285	$ -	$ -	$ 1.70
2023	7521	6017	3402	2721	4120	3296	36051	28841	16304	13044	19746	15797	$ 922	$ 922	$ -	$ 0.058	$ 73.10	$ 73.10	296	$ -	$ -	$ 1.76

Total NPW O&M Costs **$3,777,413** 2015 - 2023 only

CONCLUSION:

Present Worth Analysis

Years Considered in NPV	8	yrs
Interest Rate used for NPV	2.90%	

Cost Type	Year	Total Cost	Discount Factor	Present Value
Capital Cost	0	$ 207,575	1.00	$ 207,575
Total O&M Cost				$ 3,777,413
Net Present Worth				**$ 3,985,000**

Opinion of Probable Construction Costs

Short Term Improvements - 2023 (1.99 MGD, 5372 ppd BOD, 596 ppd NH3)
NWRF produces class B liquid with lime stabilization for 55% of solids
NWRF ST S2

Division	Description	Quantity	Units	Cost per Unit ($)	Installation Multiplier	Cost (nearest $100)
3	**CONCRETE**					**0**
	Concrete area around sludge load out station	1	LS	10,000	1.0	10,000
11	**EQUIPMENT**					**83,000**
	New submersible feed pumps to pump sludge to truck	1	EA	14,600	1.3	19,000
	New pumps to pump supernatant back to head of plant	1	EA	14,600	1.3	19,000
	New sludge load out station	1	LS	5,000	1.0	5,000
	Floating Decanters for Feed Tanks	1	LS	40,000	1.0	40,000
14	**HOISTS AND CRANES**					**5,000**
	New Davit crane	1	EA	5,000.00	1.0	5,000
15	**MECHANICAL / HVAC**					**10,000**
	Piping for pumps to load out station	1	LS	10,000	1.0	10,000
16	**ELECTRICAL and INSTRUMENTATION & CONTROLS**					**15,000**
	Electrical work to support pumps	1	LS	15,000	1.0	15,000
					SUBTOTAL 1	**113,000**
	CONSTRUCTION PRORATES(See Note 1)	18.0%	of Subtotal 1	20,340	1.0	20,400
	CONTRACTOR'S OVERHEAD & PROFIT (See Note 2)	15.0%	of Subtotal 1	16,950	1.0	17,000
					SUBTOTAL 2	**150,400**
	CONTINGENCY (See Note 4)	20.0%	of Subtotal 2	30,080	1.0	30,100
					SUBTOTAL 3	**180,500**
	ENGINEERING COSTS	15.0%	of Subtotal 3	27,075	1.0	27,075
					TOTAL	**207,575**

Notes

1 Construction Prorates [(a) (b)] — 18%

(a) General conditions includes cost associated with permits, licenses, insurance, environmental safe guards, sediment and drainage control, and special construction practices to maintain continued plant operations. Also includes misc construction materials needed for project not included above

2 Contractor's Overhead & Profit [(a)] — 15.0%

(a) Contractor's overhead and profit include costs for mobilization/demobilization, administration, and contractor/subcontractor overhead costs and profits.

4 Design Contingency [(a)] — 20.0%

(a) The design continency is added to the subtotal based on the conceptual nature of information developed for this evaluation.

5 Engineering Costs — 15%

Costs incurred during Final Design and Construction

OBJECTIVE: Calculate the Capital and O&M costs associated with alternative operation

GIVEN: Short Term Improvements - 2023 (1.99 MGD, 5372 ppd BOD, 596 ppd NH3)
NWRF treats 1.99 MGD, 5372 ppd BOD, 596 ppd NH3 to TIN<10
NWRF ST L2

O&M Costs for NWRF 2012 per Jon Mays		Liquid	Solids	
Total Annual Cost	$ 995,000	$ -	$ -	0
Operations Staff	$ 260,000	$ 221,000	$ 39,000	15% devoted to solids
Electricity	$ 230,000	$ 153,410	$ 76,590	33% devoted to solids
Chemical Costs	$ 190,000	$ -	$ 190,000	100% devoted to solids
Gas Costs	$ 30,000	$ 5,000	$ 25,000	0
Other	$ 285,000	$ 285,000	$ -	100% devoted to liquid

Average influent flow for 2012 to NWRF was 1.08MGD which is close to 1.09 MGD used in this alternative. Use 2012 O&M costs for this alternative and assume the FKC press can continue to produce a Class A product.

CALCULATIONS:

Capital Costs

See Opinion of Probable Costs Worksheet
Assume no additional capital costs for existing NWRF solids system

Total Capital Costs **$1,680,725**

Annual O&M Costs

Annual Electric Usage Escalation Factor	2.00%
Annual Staff Usage Escalation Factor	2.00%
Annual Other Escalation Factor	0.50%

Assume the electric, staff and other costs will grow over time until the short term influent flow of 1.99MGD is reached

Year	Electric Cost	Staff	Other	Gas	O&M Cost	P/F
2015	$ 153,410	$ 221,000	$ 285,000	$ 5,000	$ 664,410	$ 664,410
2016	$ 161,694	$ 231,829	$ 294,690	$ 5,170	$ 693,383	$ 673,842
2017	$ 170,426	$ 323,189	$ 304,709	$ 5,346	$ 803,669	$ 759,009
2018	$ 179,629	$ 339,025	$ 315,070	$ 5,528	$ 839,251	$ 770,275
2019	$ 189,329	$ 355,637	$ 325,782	$ 5,715	$ 876,463	$ 781,758
2020	$ 199,552	$ 373,063	$ 336,859	$ 5,910	$ 915,384	$ 793,463
2021	$ 210,328	$ 391,343	$ 348,312	$ 6,111	$ 956,094	$ 805,394
2022	$ 221,686	$ 410,519	$ 360,154	$ 6,318	$ 998,678	$ 817,557
2023	$ 233,657	$ 430,635	$ 372,400	$ 6,533	$ 1,043,224	$ 829,955

Total NPW O&M Costs **$6,895,661** 2015 - 2023 only

CONCLUSION:

Present Worth Analysis

Years Considered in NPV	8	yrs
Interest Rate used for NPV	2.90%	

Cost Type	Year	Total Cost	Discount Factor	Present Value
Capital Cost	0	$ 1,680,725	1.00	$ 1,680,725
Total O&M Cost				$ 6,895,661
Net Present Worth				**$ 8,577,000**

Opinion of Probable Construction Costs

Short Term Improvements - 2023 (1.99 MGD, 5372 ppd BOD, 596 ppd NH3)
NWRF treats 1.99 MGD, 5372 ppd BOD, 596 ppd NH3 to TIN<10
NWRF ST L2

Division	Description	Quantity	Units	Cost per Unit ($)	Installation Multiplier	Cost (nearest $100)
1	**GENERAL CONDITIONS**					**6,000**
	Transfer media into first IFAS tank	1	LS	6,000	1.0	6,000
11	**EQUIPMENT**					**836,800**
	Upgrade Grit removal system to max capacity	1	EA	14,500	2.0	29,000
	Install mixers in second IFAS tanks	4	EA	13,000	1.5	78,000
	Install second IR pump	1	EA	22,430	1.5	33,700
	Resheave existing RAS pump to 2000 gpm at 10' head	2	EA	1,000	1.2	2,400
	Install 3rd blower	1	EA	120,000	1.4	168,000
	Install additional Kruger IFAS media	1	LS	435,000	1.1	492,000
	Install new influent lift station pump	1	EA	22,430	1.5	33,700
15	**MECHANICAL / HVAC**					**20,000**
	pipe for pumps	1	LS	10,000	1.0	10,000
	Air piping modifications around blower	1	LS	10,000	1.0	10,000
16	**ELECTRICAL and INSTRUMENTATION & CONTROLS**					**52,800**
	Modify MCC to include 3rd blower on generator	1	LS	20,000	1.0	20,000
	Cost to provide power and control to equipment above	1	LS	32,746	1.0	32,800
					SUBTOTAL 1	**915,600**
	CONSTRUCTION PRORATES(See Note 1)	18.0%	of Subtotal 1	164,808	1.0	164,900
	CONTRACTOR'S OVERHEAD & PROFIT (See Note 2)	15.0%	of Subtotal 1	137,340	1.0	137,400
					SUBTOTAL 2	**1,217,900**
	CONTINGENCY (See Note 4)	20.0%	of Subtotal 2	243,580	1.0	243,600
					SUBTOTAL 3	**1,461,500**
	ENGINEERING COSTS (Site Application Process)	15.0%	of subtotal 3	219,225	1.0	219,225
					TOTAL	**1,680,725**

Notes

1 Construction Prorates [(a) (b)] 18%

(a) General conditions includes cost associated with permits, licenses, insurance, environmental safe guards, sediment and drainage control, and special construction practices to maintain continued plant operations. Also includes misc construction materials needed for project not included above

2 Contractor's Overhead & Profit [(a)] 15.0%

(a) Contractor's overhead and profit include costs for mobilization/demobilization, administration, and contractor/subcontractor overhead costs and profits.

4 Design Contingency [(a)] 20.0%

(a) The design continency is added to the subtotal based on the conceptual nature of information developed for this evaluation.

5 Engineering Costs 15%

Costs incurred during Final Design and Construction

OBJECTIVE: Calculate the Capital and O&M costs associated with alternative operation

GIVEN: Short Term Improvements - 2023 (1.99 MGD, 5372 ppd BOD, 596 ppd NH3)
NWRF produces class B liquid with lime stabilization for 100% of solids
NWRF ST S3

O&M Costs for NWRF 2012 per Jon Mays		Liquid	Solids	
Total Annual Cost	$ 995,000	$ -	$ -	0
Operations Staff	$ 260,000	$ 221,000	$ 39,000	15% devoted to solids
Electricity	$ 230,000	$ 153,410	$ 76,590	33% devoted to solids
Chemical Costs	$ 190,000	$ -	$ 190,000	100% devoted to solids
Gas Costs	$ 30,000	$ 5,000	$ 25,000	0
Other	$ 285,000	$ 285,000	$ -	100% devoted to liquid

Average influent flow for 2012 to NWRF was 1.08MGD which is close to 1.09 MGD used in this alternative. Use 2012 O&M costs for this alternative and assume the FKC press can continue to produce a Class A product.

CALCULATIONS:

Capital Costs

See Opinion of Probable Costs Worksheet
Assume no additional capital costs for existing NWRF solids system

Total Capital Costs **$450,225**

Annual O&M Costs

(2) NWRF Operations Costs

Annual Electric Usage	Escalation Factor	2.00%
Annual Staff Usage	Escalation Factor	0.50%
Annual Other	Escalation Factor	0.50%

Total Influent Flow	1.99	
SWRF	0	
NWRF	1.99	

Lime Usage Winter	553	lbs/DT
Lime Usage Summer	1318	lbs/DT
Lime no Alum	300	lbs/DT

Polymer Usage Winter	10	lbs/DT
Polymer Usage Summer	10	lbs/DT
Polymer no Alum	10	lbs/DT

Assume Liquid haul all year
Assume the electric, staff and other costs will grow over time until the short term influent flow of 1.99MGD is reached

Year	Electric Cost	Staff	Solids Disp	Chemical	O&M Cost	P/F
2015	$ 76,590	$ 39,000	$ 277,664	$ 112,998	$ 506,251	$ 506,251
2016	$ 80,726	$ 40,326	$ 306,685	$ 124,150	$ 551,886	$ 536,333
2017	$ 85,085	$ 41,697	$ 338,740	$ 136,402	$ 601,924	$ 568,474
2018	$ 89,680	$ 43,115	$ 367,085	$ 147,036	$ 646,916	$ 593,747
2019	$ 94,522	$ 44,581	$ 318,243	$ 50,377	$ 507,723	$ 452,861
2020	$ 99,627	$ 46,096	$ 344,873	$ 54,304	$ 544,900	$ 472,324
2021	$ 105,006	$ 47,664	$ 373,732	$ 58,538	$ 584,940	$ 492,742
2022	$ 110,677	$ 49,284	$ 405,006	$ 63,102	$ 628,069	$ 514,161
2023	$ 116,653	$ 50,960	$ 438,897	$ 68,021	$ 674,531	$ 536,635

	3.50% Concentratio		PPD at each plant										Liquid Haul Cost				Lime Cost			Polymer Cost		
	Sludge Produced (ppd)		SWRF		NWRF		Liquid to Haul		SWRF (gpd)	0%	NWRF (gpd)	100%	NWRF				NWRF			NWRF		
Year	Alum	No alum	Alum	No alum	Alum	No alum	Alum	No Alum	Alum	No Alum	Alum	No Alum	Summer	Winter	$/WT	$/gal	Summer	Winter	$/Ton	Summer	Winter	$/lb
2015	5290	4232	0	0	5290	4232	18112	14490	0	0	18112	14490	$ 761	$ 761	$ 19	$ 0.042	$ 387	$ 162	222	$ 35	$ 35	$ 1.32
2016	5608	4486	0	0	5608	4486	19199	15359	0	0	19199	15359	$ 840	$ 840	$ 20	$ 0.044	$ 425	$ 178	230	$ 38	$ 38	$ 1.37
2017	5944	4755	0	0	5944	4755	20351	16281	0	0	20351	16281	$ 928	$ 928	$ 21	$ 0.046	$ 467	$ 196	239	$ 42	$ 42	$ 1.42
2018	6182	4945	0	0	6182	4945	21165	16932	0	0	21165	16932	$ 1,006	$ 1,006	$ 21	$ 0.048	$ 504	$ 211	247	$ 45	$ 45	$ 1.47
2019	6429	5143	0	0	6429	5143	22012	17609	0	0	22012	17609	$ 872	$ 872	$ 22	$ 0.050	$ 99	$ 99	256	$ 39	$ 39	$ 1.52
2020	6686	5349	0	0	6686	5349	22892	18314	0	0	22892	18314	$ 945	$ 945	$ 23	$ 0.052	$ 107	$ 107	266	$ 42	$ 42	$ 1.58
2021	6954	5563	0	0	6954	5563	23808	19046	0	0	23808	19046	$ 1,024	$ 1,024	$ 24	$ 0.054	$ 115	$ 115	275	$ 46	$ 46	$ 1.64
2022	7232	5785	0	0	7232	5785	24760	19808	0	0	24760	19808	$ 1,110	$ 1,110	$ 25	$ 0.056	$ 124	$ 124	285	$ 49	$ 49	$ 1.70
2023	7521	6017	0	0	7521	6017	25751	20601	0	0	25751	20601	$ 1,202	$ 1,202	$ 26	$ 0.058	$ 133	$ 133	296	$ 53	$ 53	$ 1.76

Total NPW O&M Costs **$4,673,529** 2015 - 2023 only

CONCLUSION:

Present Worth Analysis

Years Considered in NPV	8	yrs
Interest Rate used for NPV	2.90%	

Cost Type	Year	Total Cost	Discount Factor	Present Value
Capital Cost	0	$ 450,225	1.00	$ 450,225
Total O&M Cost				$ 4,673,529
Net Present Worth				**$ 5,124,000**

Opinion of Probable Construction Costs

Short Term Improvements - 2023 (1.99 MGD, 5372 ppd BOD, 596 ppd NH3)
NWRF produces class B liquid with lime stabilization for 100% of solids
NWRF ST S3

Division	Description	Quantity	Units	Cost per Unit ($)	Installation Multiplier	Cost (nearest $100)
2	**CIVIL / SITEWORK**					**2,800**
	Demo Concrte under load out	1	LS	1,000	1.0	1,000
	Excavate for drain line to manhole and sludge pipe	1	LS	800	1.0	800
	Sod allowance	1	LS	1,000	1.0	1,000
						0
3	**CONCRETE**					**10,400**
	Concrete Pad under load out	8	CY	500	1.0	4,000
	Concrete Wall in WAS Tank	11	CY	580	1.0	6,400
5	**METALS**					**4,000**
	Galv Metal load out support	1	LS	4,000	1.0	4,000
9	**FINISHES**					**8,000**
	Painting allowance	1	LS	8,000	1.0	8,000
11	**EQUIPMENT**					**115,800**
	New Gorman Rupp Pump	1	EA	8,000	1.3	10,400
	Floating Decanters for Feed Tanks	3	LS	20,000	1.0	60,000
	Flygt submerible pump	1	EA	8,000	1.3	10,400
	New sulfuric acid storage and pumping system	1	LS	35,000	1.0	35,000
14	**HOISTS AND CRANES**					**1,000**
	Use existing hoists	1	LS	1,000	1.0	1,000
15	**MECHANICAL / HVAC**					**62,000**
	Piping for load out station	1	LS	15,000	1.0	15,000
	Piping for decanters in tanks	1	LS	15,000	1.0	15,000
	actuated valves for decanter	3	EA	8,000	1.0	24,000
	actuated valves for load out drain	1	EA	8,000	1.0	8,000
16	**ELECTRICAL and INSTRUMENTATION & CONTROLS**					**57,000**
	Electrical work to support pumps/actuated valves	1	LS	40,000	1.0	40,000
	Flow meter for load out station	1	LS	3,000	1.0	3,000
	TSS Meter	1	LS	14,000	1.0	14,000
					SUBTOTAL 1	**245,200**
	CONSTRUCTION PRORATES(See Note 1)	18.0%	of Subtotal 1	44,136	1.0	44,200
	CONTRACTOR'S OVERHEAD & PROFIT (See Note 2)	15.0%	of Subtotal 1	36,780	1.0	36,800
					SUBTOTAL 2	**326,200**
	CONTINGENCY (See Note 4)	20.0%	of Subtotal 2	65,240	1.0	65,300
					SUBTOTAL 3	**391,500**
	ENGINEERING COSTS	15.0%	of Subtotal 3	58,725	1.0	58,725
					TOTAL	**450,225**

Notes

1 Construction Prorates [(a) (b)] 18%

(a) General conditions includes cost associated with permits, licenses, insurance, environmental safe guards, sediment and drainage control, and special construction practices to maintain continued plant operations. Also includes misc construction materials needed for project not included above 0.27

2 Contractor's Overhead & Profit [(a)] 15.0%

(a) Contractor's overhead and profit include costs for mobilization/demobilization, administration, and contractor/subcontractor overhead costs and profits.

4 Design Contingency [(a)] 20.0%

(a) The design continency is added to the subtotal based on the conceptual nature of information developed for this evaluation.

5 Engineering Costs 15%

Costs incurred during Final Design and Construction

OBJECTIVE: Calculate the Capital and O&M costs associated with alternative operation

GIVEN: Short Term Improvements - 2023 (1.99 MGD, 5372 ppd BOD, 596 ppd NH3)
NWRF produces class B liquid and Class A Cake with lime stabilization
NWRF ST S4

O&M Costs for NWRF 2012 per Jon Mays		Liquid	Solids	
Total Annual Cost	$ 995,000	$ -	$ -	0
Operations Staff	$ 260,000	$ 221,000	$ 39,000	15% devoted to solids
Electricity	$ 230,000	$ 153,410	$ 76,590	33% devoted to solids
Chemical Costs	$ 190,000	$ -	$ 190,000	100% devoted to solids
Gas Costs	$ 30,000	$ 5,000	$ 25,000	0
Other	$ 285,000	$ 285,000	$ -	100% devoted to liquid

Average influent flow for 2012 to NWRF was 1.08MGD which is close to 1.09 MGD used in this alternative. Use 2012 O&M costs for this alternative and assume the FKC press can continue to produce a Class A product.

CALCULATIONS:

Capital Costs

See Opinion of Probable Costs Worksheet
Assume no additional capital costs for existing NWRF solids system

Total Capital Costs **$450,225**

Annual O&M Costs

(2) NWRF Operations Costs

Annual Electric Usage	Escalation Factor	2.00%
Annual Staff Usage	Escalation Factor	0.50%
Annual Other	Escalation Factor	0.50%

Total Influent Flow	1.99	
SWRF	0	
NWRF	1.99	
Cake %	30%	

Lime Usage Winter	553	lbs/DT
Lime Usage Summer	1318	lbs/DT
Lime no Alum	300	lbs/DT

Polymer Usage Winter	10	lbs/DT
Polymer Usage Summer	10	lbs/DT
Polymer no Alum	10	lbs/DT

Assume Liquid haul all year
Assume the electric, staff and other costs will grow over time until the short term influent flow of 1.99MGD is reached

Year	Electric Cost	Staff	Solids Disp	Chemical	O&M Cost	P/F
2015	$ 76,590	$ 39,000	$ 169,405	$ 112,998	$ 397,993	$ 397,993
2016	$ 80,726	$ 40,326	$ 187,111	$ 124,150	$ 432,312	$ 420,129
2017	$ 85,085	$ 41,697	$ 206,668	$ 136,402	$ 469,852	$ 443,742
2018	$ 89,680	$ 43,115	$ 223,962	$ 147,036	$ 503,792	$ 462,386
2019	$ 94,522	$ 44,581	$ 70,082	$ 50,377	$ 259,562	$ 231,515
2020	$ 99,627	$ 46,096	$ 75,946	$ 54,304	$ 275,974	$ 239,216
2021	$ 105,006	$ 47,664	$ 82,302	$ 58,538	$ 293,510	$ 247,246
2022	$ 110,677	$ 49,284	$ 89,188	$ 63,102	$ 312,251	$ 255,621
2023	$ 116,653	$ 50,960	$ 96,652	$ 68,021	$ 332,286	$ 264,356

	3.50% Concentratio		PPD at each plant																											
	Sludge Produced (ppd)		SWRF		NWRF		Liquid to Haul		SWRF (gpd)		0% NWRF (gpd)		100%	Liquid and cake Haul Cost				Lime Cost				Polymer Cost			
														NWRF				NWRF				NWRF			
Year	Alum	No alum	Alum	No alum	Alum	No alum	Alum	No Alum	Alum	No Alum	Alum	No Alum		Summer	Winter	$/WT	$/gal	Summer	Winter	$/Ton		Summer	Winter	$/lb	
2015	5290	4232	0	0	5290	4232	18112	14490	0	0	18112	14490		$ 761	$ 168	$ 19	$ 0.042	$ 387	$ 162	222		$ 35	$ 35	$ 1.32	
2016	5608	4486	0	0	5608	4486	19199	15359	0	0	19199	15359		$ 840	$ 185	$ 20	$ 0.044	$ 425	$ 178	230		$ 38	$ 38	$ 1.37	
2017	5944	4755	0	0	5944	4755	20351	16281	0	0	20351	16281		$ 928	$ 204	$ 21	$ 0.046	$ 467	$ 196	239		$ 42	$ 42	$ 1.42	
2018	6182	4945	0	0	6182	4945	21165	16932	0	0	21165	16932		$ 1,006	$ 221	$ 21	$ 0.048	$ 504	$ 211	247		$ 45	$ 45	$ 1.47	
2019	6429	5143	0	0	6429	5143	22012	17609	0	0	22012	17609		$ 192	$ 192	$ 22	$ 0.050	$ 99	$ 99	256		$ 39	$ 39	$ 1.52	
2020	6686	5349	0	0	6686	5349	22892	18314	0	0	22892	18314		$ 208	$ 208	$ 23	$ 0.052	$ 107	$ 107	266		$ 42	$ 42	$ 1.58	
2021	6954	5563	0	0	6954	5563	23808	19046	0	0	23808	19046		$ 225	$ 225	$ 24	$ 0.054	$ 115	$ 115	275		$ 46	$ 46	$ 1.64	
2022	7232	5785	0	0	7232	5785	24760	19808	0	0	24760	19808		$ 244	$ 244	$ 25	$ 0.056	$ 124	$ 124	285		$ 49	$ 49	$ 1.70	
2023	7521	6017	0	0	7521	6017	25751	20601	0	0	25751	20601		$ 265	$ 265	$ 26	$ 0.058	$ 133	$ 133	296		$ 53	$ 53	$ 1.76	

Total NPW O&M Costs **$2,962,204** 2015 - 2023 only

CONCLUSION:

Present Worth Analysis

Years Considered in NPV	8	yrs
Interest Rate used for NPV	2.90%	

Cost Type	Year	Total Cost	Discount Factor	Present Value
Capital Cost	0	$ 450,225	1.00	$ 450,225
Total O&M Cost				$ 2,962,204
Net Present Worth				**$ 3,413,000**

Opinion of Probable Construction Costs

Short Term Improvements - 2023 (1.99 MGD, 5372 ppd BOD, 596 ppd NH3)
NWRF produces class B liquid and Class A Cake with lime stabilization
NWRF ST S4

Division	Description	Quantity	Units	Cost per Unit ($)	Installation Multiplier	Cost (nearest $100)
2	**CIVIL / SITEWORK**					**2,800**
	Demo Concrte under load out	1	LS	1,000	1.0	1,000
	Excavate for drain line to manhole and sludge pipe	1	LS	800	1.0	800
	Sod allowance	1	LS	1,000	1.0	1,000
						0
3	**CONCRETE**					**10,400**
	Concrete Pad under load out	8	CY	500	1.0	4,000
	Concrete Wall in WAS Tank	11	CY	580	1.0	6,400
5	**METALS**					**4,000**
	Galv Metal load out support	1	LS	4,000	1.0	4,000
9	**FINISHES**					**8,000**
	Painting allowance	1	LS	8,000	1.0	8,000
11	**EQUIPMENT**					**115,800**
	New Gorman Rupp Pump	1	EA	8,000	1.3	10,400
	Floating Decanters for Feed Tanks	3	LS	20,000	1.0	60,000
	Flygt submerible pump	1	EA	8,000	1.3	10,400
	New sulfuric acid storage and pumping system	1	LS	35,000	1.0	35,000
14	**HOISTS AND CRANES**					**1,000**
	Use existing hoists	1	LS	1,000	1.0	1,000
15	**MECHANICAL / HVAC**					**62,000**
	Piping for load out station	1	LS	15,000	1.0	15,000
	Piping for decanters in tanks	1	LS	15,000	1.0	15,000
	actuated valves for decanter	3	EA	8,000	1.0	24,000
	actuated valves for load out drain	1	EA	8,000	1.0	8,000
16	**ELECTRICAL and INSTRUMENTATION & CONTROLS**					**57,000**
	Electrical work to support pumps/actuated valves	1	LS	40,000	1.0	40,000
	Flow meter for load out station	1	LS	3,000	1.0	3,000
	TSS Meter	1	LS	14,000	1.0	14,000
					SUBTOTAL 1	**245,200**
	CONSTRUCTION PRORATES(See Note 1)	18.0%	of Subtotal 1	44,136	1.0	44,200
	CONTRACTOR'S OVERHEAD & PROFIT (See Note 2)	15.0%	of Subtotal 1	36,780	1.0	36,800
					SUBTOTAL 2	**326,200**
	CONTINGENCY (See Note 4)	20.0%	of Subtotal 2	65,240	1.0	65,300
					SUBTOTAL 3	**391,500**
	ENGINEERING COSTS	15.0%	of Subtotal 3	58,725	1.0	58,725
					TOTAL	**450,225**

Notes

1 Construction Prorates [(a) (b)] 18%

(a) General conditions includes cost associated with permits, licenses, insurance, environmental safe guards, sediment and drainage control, and special construction practices to maintain continued plant operations. Also includes misc construction materials needed for project not included above 0.27

2 Contractor's Overhead & Profit [(a)] 15.0%

(a) Contractor's overhead and profit include costs for mobilization/demobilization, administration, and contractor/subcontractor overhead costs and profits.

4 Design Contingency [(a)] 20.0%

(a) The design continency is added to the subtotal based on the conceptual nature of information developed for this evaluation.

5 Engineering Costs 15%

Costs incurred during Final Design and Construction

THIS PAGE INTENTIONALLY LEFT BLANK

OBJECTIVE: Calculate the Capital and O&M costs associated with alternative operation

GIVEN: Long Term Improvements - 2029 (2.5 MGD, 6798 ppd BOD, 754 ppd NH3)
SWRF treats 1.3 MGD, 3959 ppd BOD, 392 ppd NH3 for TIN<10
SWRF LT L1

O&M Costs for SWRF 2010 per Jon Mays		Liquid	Solids	
Total Annual Cost	$ 640,000	$ -	$ -	0
Option 1 - Operations Staff	$ 160,000	$ 152,000	$ 8,000	5% devoted to solids
Option 2 - Contract Operator	$ 144,000	$ 136,800	$ 7,200	12,000 per month per Wayne Ramey
Electricity	$ 162,000	$ 108,054	$ 53,946	33% devoted to solids
Liquid Haul	$ 132,000	$ -	$ 132,000	100% devoted to solids
Other	$ 186,000	$ 186,000	$ -	100% devoted to liquid

Assume operations staff devoted to 1.6 MGD IFAS is similar to staff required in 2010. Assume other facility costs are also similar to 2010 costs. Electric usage calculated below.

CALCULATIONS:

Capital Costs

See Opinion of Probable Costs Worksheet

Total Capital Costs **$3,681,610**

Annual O&M Costs

Description	Quantity		Motor Size		Brake HP Each	Total Wire Power	Motor Effeciency	Run Time, hrs	Daily Energy Use	Annual Energy Use	Unit Cost	Annual Electricity Cost
	Installed	Operating	Motor Size	Total Installed								
			(HP)	(HP)	(BHP)	(kW)	(%)	(hr/day)	(kWh/day)	(kWh/yr)	($/kWh)	($/yr)
3 blowers in operation for IFAS	1	2	150.0	150.0	150.00	249.33	90%	24	5,984	2,184,160	$0.12	$256,857
				Total Brake Hp	**150**			**Daily Energy Use**	**5,984**	**Future Annual Cost**		**$256,857**

(1) SWRF Operations Costs

Blower Electric Costs	$ 256,857	per year	
Other Electric Costs	$ 24,480	per year	Assume 50% of 2010 electric is devoted to blowers and 33% devoted to solids = 17% for other electrical
Operations Cost	$ 152,000	per year	
Other O&M Costs	$ 186,000	per year	

Assume staff, electric, and other cost are similar to cost in 2010 for1.3 MGD influent flow

Year	Electric Cost	Staff	Other Costs	Chemical	O&M Cost	P/F
2024	$ 380,112	$ 196,599	$ 240,575	$ -	$ 817,287	$ 631,882
2025	$ 393,036	$ 202,301	$ 247,552	$ -	$ 842,889	$ 633,310
2026	$ 406,399	$ 208,167	$ 254,731	$ -	$ 869,298	$ 634,745
2027	$ 420,217	$ 214,204	$ 262,118	$ -	$ 896,539	$ 636,187
2028	$ 434,504	$ 220,416	$ 269,720	$ -	$ 924,640	$ 637,636
2029	$ 449,277	$ 226,808	$ 277,542	$ -	$ 953,627	$ 639,092

Total Annual O&M Costs **$3,812,852** 2023 - 2029 only

CONCLUSION:

Present Worth Analysis

Years Considered in NPV 8 yrs
Interest Rate used for NPV 2.90%

Cost Type	Year	Total Cost	Discount Factor	Present Value
Capital Cost	0	$ 3,681,610	1.00	$ 3,681,610
Total Annual O&M Costs				$ 3,812,852
Net Present Worth				**$ 7,495,000**

Opinion of Probable Construction Costs

Long Term Improvements - 2029 (2.5 MGD, 6798 ppd BOD, 754 ppd NH3)
SWRF treats 1.3 MGD, 3959 ppd BOD, 392 ppd NH3 for TIN<10
SWRF LT L1

Division	Description	Quantity	Units	Cost per Unit ($)	Installation Multiplier	Cost (nearest $100)
1	**GENERAL CONDITIONS**					**15,000**
	Demo existing air headers and diffuers	1	LS	15,000	1.0	15,000
3	**CONCRETE**					**58,500**
	Construct concrete walls in Aeration Tanks	117	CY	500	1.0	58,500
11	**EQUIPMENT**					**1,410,900**
	IFAS media, screens, diffuser grids	1	LS	1,058,000	1.1	1,163,800
	Install new aeration blower	1	EA	120,000	1.2	144,000
	Install new IR pumps	2	EA	22,100	1.2	53,100
	Service existing pumps and headworks equipment	1	LS	10,000	1.0	10,000
	Chemical Feed pumps for ferric chloride to remove phosphorous	1	LS	40,000	1.0	40,000
15	**MECHANICAL / HVAC**					**50,000**
	Process Piping and Valves	1	LS	50,000	1.0	50,000
16	**ELECTRICAL and INSTRUMENTATION & CONTROLS**					**471,400**
	Electrical work to support equipment	1	LS	245,600	1.0	245,600
	Install nitrate probes in Anoxic tank	1	LS	12,900	1.0	12,900
	Install Ammonia probes at end of IFAS tanks	1	LS	12,900	1.0	12,900
	Upgrade site electrical	1	LS	200,000	1.0	200,000
					SUBTOTAL 1	**2,005,800**
	CONSTRUCTION PRORATES(See Note 1)	18.0%	of Subtotal 1	361,044	1.0	361,100
	CONTRACTOR'S OVERHEAD & PROFIT (See Note 2)	15.0%	of Subtotal 1	300,870	1.0	300,900
					SUBTOTAL 2	**2,667,800**
	CONTINGENCY (See Note 4)	20.0%	of Subtotal 2	533,560	1.0	533,600
					SUBTOTAL 3	**3,201,400**
	ENGINEERING COSTS	15.0%	of Subtotal 3	480,210	1.0	480,210
					TOTAL	**3,681,610**

Notes

1 Construction Prorates [(a) (b)] 18%

(a) General conditions includes cost associated with permits, licenses, insurance, environmental safe guards, sediment and drainage control, and special construction practices to maintain continued plant operations. Also includes misc construction materials needed for project not included above

2 Contractor's Overhead & Profit [(a)] 15.0%

(a) Contractor's overhead and profit include costs for mobilization/demobilization, administration, and contractor/subcontractor overhead costs and profits.

4 Design Contingency [(a)] 20.0%

(a) The design continency is added to the subtotal based on the conceptual nature of information developed for this evaluation.

5 Engineering Costs 15%

Costs incurred during Final Design and Construction

OBJECTIVE: Calculate the Capital and O&M costs associated with alternative operation

GIVEN: Long Term Improvements - 2029 (2.5 MGD, 6798 ppd BOD, 754 ppd NH3)
SWRF used as EQ
SWRF LT L2

O&M Costs for SWRF 2010 per Jon Mays		Liquid	Solids	
Total Annual Cost	$ 640,000	$ -	$ -	0
Option 1 - Operations Staff	$ 160,000	$ 152,000	$ 8,000	5% devoted to solids
Option 2 - Contract Operator	$ 144,000	$ 136,800	$ 7,200	12,000 per month per Wayne Ramey
Electricity	$ 162,000	$ 108,054	$ 53,946	33% devoted to solids
Liquid Haul	$ 132,000	$ -	$ 132,000	100% devoted to solids
Other	$ 186,000	$ 186,000	$ -	100% devoted to liquid

Assume only 10% of NWRF staff required for maintainting and checking the splitter box

CALCULATIONS:

Capital Costs

See Opinion of Probable Costs Worksheet

Total Capital Costs **$201,940**

Annual O&M Costs

Description	Quantity		Motor Size		Brake HP Each	Total Wire Power	Motor Effeciency	Run Time, hrs	Daily Energy Use	Annual Energy Use	Unit Cost	Annual Electricity Cost
	Installed	Operating	Motor Size	Total Installed								
			(HP)	(HP)	(BHP)	(kW)	(%)	(hr/day)	(kWh/day)	(kWh/yr)	($/kWh)	($/yr)
1 blowers in operation for keeping EQ fresh	1	1	125.0	125.0	75.00	62.33	90%	24	1,496	546,040	$0.12	$64,214
Influent Pump	3	1	50.0	150.0	40.00	33.24	90%	8	266	97,074	$0.12	$11,416
Screen Wash Press	1	1	5.0	5.0	4.00	3.32	90%	2	7	2,427	$0.12	$285
				Total Brake Hp	**119**			**Daily Energy Use**	**1,769**	**Future Annual Cost**		**$75,915**

(1) SWRF Operations Costs

Electric Costs	$ 75,915	per year	
Operations Cost	$ 16,000	per year	Assume 10% of NWRF staff time would be required to check on the SWRF as an EQ
Other O&M Costs	$ 50,000	per year	Periodic Maintenance of Influent LS/Headworks/Blowers

Total Annual O&M Costs **$141,915** 2015-2029

CONCLUSION:

Present Worth Analysis

Years Considered in NPV 6 yrs
Interest Rate used for NPV 2.90%

Cost Type	Year	Total Cost	Discount Factor	Present Value
Capital Cost	0	$ 201,940	1.00	$ 201,940
Annual O&M Cost	1-x	$141,915	5.44	$ 772,000

Net Present Worth **$ 974,000**

Opinion of Probable Construction Costs

Long Term Improvements - 2029 (2.5 MGD, 6798 ppd BOD, 754 ppd NH3)
SWRF used as EQ
SWRF LT L2

Division	Description	Quantity	Units	Cost per Unit ($)	Installation Multiplier	Cost (nearest $100)
2	**CIVIL / SITEWORK**					**10,000**
	Site piping from pumps to manhole	1	LS	10,000	1.0	10,000
11	**EQUIPMENT**					**20,000**
	Pumps to pump back into sewer line	1	LS	20,000	1.0	20,000
						0
						0
						0
15	**MECHANICAL / HVAC**					**30,000**
	Install an actuator on the splitter box weir gate	1	LS	25,000	1.2	30,000
16	**ELECTRICAL and INSTRUMENTATION & CONTROLS**					**50,000**
	Electrical work to support equipment	1	LS	50,000	1.0	50,000
						0
						0
						0
					SUBTOTAL 1	**110,000**
	CONSTRUCTION PRORATES(See Note 1)	18.0%	of Subtotal 1	19,800	1.0	19,800
	CONTRACTOR'S OVERHEAD & PROFIT (See Note 2)	15.0%	of Subtotal 1	16,500	1.0	16,500
					SUBTOTAL 2	**146,300**
	CONTINGENCY (See Note 4)	20.0%	of Subtotal 2	29,260	1.0	29,300
					SUBTOTAL 3	**175,600**
	ENGINEERING COSTS	15.0%	of Subtotal 3	26,340	1.0	26,340
					TOTAL	**201,940**

Notes

1 Construction Prorates [(a) (b)] — 18%

(a) General conditions includes cost associated with permits, licenses, insurance, environmental safe guards, sediment and drainage control, and special construction practices to maintain continued plant operations. Also includes misc construction materials needed for project not included above

2 Contractor's Overhead & Profit [(a)] — 15.0%

(a) Contractor's overhead and profit include costs for mobilization/demobilization, administration, and contractor/subcontractor overhead costs and profits.

4 Design Contingency [(a)] — 20.0%

(a) The design continency is added to the subtotal based on the conceptual nature of information developed for this evaluation.

5 Engineering Costs — 15%

Costs incurred during Final Design and Construction

Appendix L

Calculations by: NAW

OBJECTIVE: Calculate the Capital and O&M costs associated with alternative operation

GIVEN: Long Term Improvements - 2029 (2.5 MGD, 6798 ppd BOD, 754 ppd NH3)
SWRF produces class B liquid with aerobic digestion for 52% of solids
SWRF LT S1

O&M Costs for SWRF 2010 per Jon Mays		Liquid	Solids	
Total Annual Cost	$ 640,000	$ -	$ -	0
Option 1 - Operations Staff	$ 160,000	$ 152,000	$ 8,000	5% devoted to solids
Option 2 - Contract Operator	$ 144,000	$ 136,800	$ 7,200	12,000 per month per Wayne Ramey
Electricity	$ 162,000	$ 108,054	$ 53,946	33% devoted to solids
Liquid Haul	$ 132,000	$ -	$ 132,000	100% devoted to solids
Other	$ 186,000	$ 186,000	$ -	100% devoted to liquid

Assume operations staff devoted to 1.6 MGD IFAS and solids is similar to staff required in 2010. Assume other facility costs are also similar to 2010 costs. Electric usage calculated below.

	Without Alum sludge ppd	gpd
Biosolids Production at SWRF 2029	3,959	52,718

Check Digester Volume Required
Use equation 14-22 on page 1537 Metcalf and Eddy

Daily Flow Rate to Digester	52718	gpd	
Daily Solids Rate to Digester	3959		
Influent TSS	7500	mg/l	
Cake concentration	35000	mg/l	
Reaction Rate Constant	0.05	d^-1	from metcalf and eddy
VSS/TSS in Digester	0.8		
SRT required	60	days	
Volume Required =	199,352	gallons	The aerobic digesters have a total vol of 370000

The existing Aerobic digesters have sufficient volume to meet 60 day SRT in 2029 with thickeners
Assume WTP stops discharging Alum Sludge to NWRF after 4 years

CALCULATIONS:

Capital Costs

See Opinion of Probable Costs Worksheet
Assume Town does preparation of SWRF for continued operation

Total Capital Costs **$1,129,760**

Annual O&M Costs

(2) SWRF Operations Costs

Electric Costs	$ 53,946	per year
Operations Staff	$ 8,000	per year

Assume staff and electric cost are similar to cost in 2010 for1.3 MGD influent flow

Year	Electric Cost	Staff	Solids Disp	Chemical	O&M Cost	P/F
2024	$ 72,886	$ 9,313	$ 247,324	$ 5,938	$ 335,461	$ 259,361
2025	$ 75,364	$ 9,583	$ 268,020	$ 6,176	$ 359,143	$ 269,845
2026	$ 77,927	$ 9,861	$ 290,448	$ 6,423	$ 384,658	$ 280,871
2027	$ 80,576	$ 10,147	$ 314,753	$ 6,680	$ 412,156	$ 292,467
2028	$ 83,316	$ 10,441	$ 341,092	$ 6,947	$ 441,795	$ 304,664
2029	$ 86,148	$ 10,744	$ 369,634	$ 7,225	$ 473,751	$ 317,494

Total NPW O&M Costs **$1,724,700** 2024 - 2029 only

Total Influent Flow	2.5	
SWRF	1.3	
NWRF	1.2	

Polymer Usage Winter	10	lbs/DT
Polymer Usage Summer	10	lbs/DT
Polymer no Alum	10	lbs/DT

3.50% Concentratio		PPD at each plant														Polymer Cost	
Sludge Produced (ppd)		SWRF		NWRF		Liquid to Haul		SWRF 52%		NWRF 48%							
Alum	No alum	Alum	No alum	Alum	No alum	Alum	No Alum	Alum	No Alum	Alum	No Alum	Liquid Ha	Daily Cost			$/lb	
7822	6258	4067	3254	3755	3004	26781	21425	13926	11141	12855	10284	$ 0.061	$ 678	$ 16	$ 1.82		
8135	6508	4230	3384	3905	3124	27852	22282	14483	11586	13369	10695	$ 0.063	$ 734	$ 17	$ 1.89		
8460	6768	4399	3519	4061	3249	28966	23173	15062	12050	13904	11123	$ 0.066	$ 796	$ 18	$ 1.96		
8799	7039	4575	3660	4223	3379	30125	24100	15665	12532	14460	11568	$ 0.069	$ 862	$ 18	$ 2.03		
9151	7320	4758	3807	4392	3514	31330	25064	16291	13033	15038	12031	$ 0.072	$ 934	$ 19	$ 2.10		
9517	7613	4949	3959	4568	3654	32583	26066	16943	13554	15640	12512	$ 0.075	$ 1,013	$ 20	$ 2.18		

CONCLUSION:

Present Worth Analysis

Years Considered in NPV	8	yrs
Interest Rate used for NPV	2.90%	

Cost Type	Year	Total Cost	Discount Factor	Present Value
Capital Cost	0	$1,129,760	1.00	$ 1,129,760
Total O&M Cost				$ 1,724,700
Net Present Worth				**$ 2,855,000**

Opinion of Probable Construction Costs

Long Term Improvements - 2029 (2.5 MGD, 6798 ppd BOD, 754 ppd NH3)
SWRF produces class B liquid with aerobic digestion for 52% of solids
SWRF LT S1

Division	Description	Quantity	Units	Cost per Unit ($)	Installation Multiplier	Cost (nearest $100)
1	**GENERAL CONDITIONS**					**0**
2	**CIVIL / SITEWORK**					**10,000**
	Site Grading	1	LS	10,000	1.0	10,000
3	**CONCRETE**					**0**
	Concrete around New RDT Building	1	LS	10,000	1.0	10,000
4	**MASONRY**					**300,000**
	Masonry block building	1500	SF	200	1.0	300,000
11	**EQUIPMENT**					**205,400**
	New Rotary Drum Thickener to thicken WAS to 3.5%	1	LS	90,000	1.3	117,000
	New Polymer system for thickener	1	LS	20,000	1.3	26,000
	New Thickener Feed Pumps	2	EA	16,000	1.3	41,600
	New TWAS pumps	2	EA	8,000	1.3	20,800
16	**ELECTRICAL and INSTRUMENTATION & CONTROLS**					**100,000**
	Electrical work to support thickener and pumps	1	LS	100,000	1.0	100,000
					SUBTOTAL 1	**615,400**
	CONSTRUCTION PRORATES(See Note 1)	18.0%	of Subtotal 1	110,772	1.0	110,800
	CONTRACTOR'S OVERHEAD & PROFIT (See Note 2)	15.0%	of Subtotal 1	92,310	1.0	92,400
					SUBTOTAL 2	**818,600**
	CONTINGENCY (See Note 4)	20.0%	of Subtotal 2	163,720	1.0	163,800
					SUBTOTAL 3	**982,400**
	ENGINEERING COSTS	15.0%	of Subtotal 3	147,360	1.0	147,360
					TOTAL	**1,129,760**

Notes

1 Construction Prorates [(a) (b)] — 18%

(a) General conditions includes cost associated with permits, licenses, insurance, environmental safe guards, sediment and drainage control, and special construction practices to maintain continued plant operations. Also includes misc construction materials needed for project not included above

2 Contractor's Overhead & Profit [(a)] — 15.0%

(a) Contractor's overhead and profit include costs for mobilization/demobilization, administration, and contractor/subcontractor overhead costs and profits.

4 Design Contingency [(a)] — 20.0%

(a) The design continency is added to the subtotal based on the conceptual nature of information developed for this evaluation.

5 Engineering Costs — 15%

Costs incurred during Final Design and Construction

OBJECTIVE: Calculate the Capital and O&M costs associated with alternative operation

GIVEN: Long Term Improvements - 2029 (2.5 MGD, 6798 ppd BOD, 754 ppd NH3)
NWRF treats 1.2 MGD, 3655 ppd BOD, 362 ppd NH3 for TIN<10
NWRF LT L1

O&M Costs for NWRF 2012 per Jon Mays		Liquid	Solids	
Total Annual Cost	$ 995,000	$ -	$ -	0
Operations Staff	$ 260,000	$ 221,000	$ 39,000	15% devoted to solids
Electricity	$ 230,000	$ 153,410	$ 76,590	33% devoted to solids
Chemical Costs	$ 190,000	$ -	$ 190,000	100% devoted to solids
Gas Costs	$ 30,000	$ 5,000	$ 25,000	0
Other	$ 285,000	$ 285,000	$ -	100% devoted to liquid

Average influent flow for 2012 to NWRF was 1.08MGD which is close to 0.9 MGD used in this alternative. Use 2012 O&M costs for this alternative and assume the FKC press can continue to produce a Class A product.

CALCULATIONS:

Capital Costs

Assume no capital cost for operation of NWRF at 1.2 MGD

Total Capital Costs **$0**

Annual O&M Costs

Assume staff, electric, and other cost are similar to cost in 2012 for1.2 MGD influent flow
Assume another operator is hired in 2017

Year	Electric Cost	Staff	Other	Gas Costs	O&M Cost	P/F
2024	$ 207,271	$ 383,568	$ 368,624	$ 6,755	$ 966,218	$ 747,028
2025	$ 214,318	$ 394,692	$ 379,314	$ 6,985	$ 995,309	$ 747,832
2026	$ 221,605	$ 406,138	$ 390,314	$ 7,223	$ 1,025,279	$ 748,640
2027	$ 229,140	$ 417,916	$ 401,633	$ 7,468	$ 1,056,157	$ 749,452
2028	$ 236,930	$ 430,035	$ 413,280	$ 7,722	$ 1,087,968	$ 750,268
2029	$ 244,986	$ 442,506	$ 425,265	$ 7,985	$ 1,120,742	$ 751,088

Total NPW O&M Costs **$4,494,307** 2024 - 2029 only

CONCLUSION:

Present Worth Analysis

Years Considered in NPV 8 yrs
Interest Rate used for NPV 2.90%

Cost Type	Year	Total Cost	Discount Factor	Present Value
Capital Cost	0	$ -	1.00	$ -
Total O&M Costs				$ 4,494,307
Net Present Worth				**$ 4,495,000**

OBJECTIVE: Calculate the Capital and O&M costs associated with alternative operation

GIVEN: Long Term Improvements - 2029 (2.5 MGD, 6798 ppd BOD, 754 ppd NH3)
NWRF produces class A Cake from FKC screw press for 48% of solids
NWRF LT S1

O&M Costs for NWRF 2012 per Jon Mays		Liquid	Solids	
Total Annual Cost	$ 995,000	$ -	$ -	0
Operations Staff	$ 260,000	$ 221,000	$ 39,000	15% devoted to solids
Electricity	$ 230,000	$ 153,410	$ 76,590	33% devoted to solids
Chemical Costs	$ 190,000	$ -	$ 190,000	100% devoted to solids
Gas Costs	$ 30,000	$ 5,000	$ 25,000	0
Other	$ 285,000	$ 285,000	$ -	100% devoted to liquid

Average influent flow for 2012 to NWRF was 1.08MGD which is close to 0.9 MGD used in this alternative. Use 2012 O&M costs for this alternative and assume the FKC press can continue to produce a Class A product.

Total Influent Flow	2.5
SWRF	1.3
NWRF	1.2
Cake %	30%

CALCULATIONS:

Capital Costs

Assume no additional capital costs for existing NWRF solids system

Total Capital Costs **$0**

Lime no Alum 300 lbs/DT

Polymer no Alum 40

Annual O&M Costs

Assume Cake for 6 months and Liquid for 6 months until 2019 when WTP stops sending Alum Sludge (30% cake)
Assume staff and electric cost are similar to cost in 2012 for1.2 MGD influent flow

Year	Electric and Gas Cost	Staff	Solids Disp	Chemical	O&M Cost	P/F
2024	$ 137,257	$ 50,443	$ 50,275	$ 65,168	$ 303,144	$ 234,375
2025	$ 141,924	$ 51,906	$ 54,482	$ 70,249	$ 318,561	$ 239,353
2026	$ 146,750	$ 53,411	$ 59,041	$ 75,726	$ 334,928	$ 244,558
2027	$ 151,739	$ 54,960	$ 63,982	$ 81,629	$ 352,310	$ 250,000
2028	$ 156,898	$ 56,554	$ 69,336	$ 87,993	$ 370,781	$ 255,692
2029	$ 162,233	$ 58,194	$ 75,138	$ 94,853	$ 390,417	$ 261,646

2.50% Concentratio		PPD at each plant																						
Sludge Produced (ppd)		SWRF (ppd)		NWRF (ppd)		ppd	Liquid to Haul (gpd)		SWRF (gpd) 52%		NWRF (gpd) 48%		Cake haul NWRF				Lime Cost NWRF			Polymer Cost NWRF	
Alum	No alum	Alum	No alum	Alum	No alum	Lime added	Alum	No Alum	Alum	No Alum	Alum	No Alum	Summer	Winter	$/WT	$/gal	Summer	Winter	$/Ton	Summer	Winter
7822	6258	4067	3254	3753	3004	0	37493	29994	19496	15597	17997	14397	$ 138	$ 138	$ 28	$ 0.061	$ 69	$ 69	307	$ 109	$ 109
8135	6508	4230	3384	3905	3124	0	38993	31194	20276	16221	18716	14973	$ 149	$ 149	$ 29	$ 0.063	$ 74	$ 74	318	$ 118	$ 118
8460	6768	4399	3519	4061	3249	0	40552	32442	21087	16870	19465	15572	$ 162	$ 162	$ 30	$ 0.066	$ 80	$ 80	329	$ 127	$ 127
8799	7039	4575	3660	4223	3379	0	42174	33740	21931	17545	20244	16195	$ 175	$ 175	$ 31	$ 0.069	$ 86	$ 86	341	$ 137	$ 137
9151	7320	4758	3807	4392	3514	0	43861	35089	22808	18246	21054	16843	$ 190	$ 190	$ 32	$ 0.072	$ 93	$ 93	354	$ 148	$ 148
9517	7613	4949	3959	4568	3654	0	45616	36493	23720	18976	21896	17517	$ 206	$ 206	$ 34	$ 0.075	$ 101	$ 101	367	$ 159	$ 159

Total NPW O&M Costs **$1,485,624** 2024 - 2029 only

CONCLUSION:

Present Worth Analysis

Years Considered in NPV	8 yrs
Interest Rate used for NPV	2.90%

Cost Type	Year	Total Cost	Discount Factor	Present Value
Capital Cost	0	$ -	1.00	$ -
Total O&M Cost				$ 1,485,624
Net Present Worth				**$ 1,486,000**

OBJECTIVE: Calculate the Capital and O&M costs associated with alternative operation

GIVEN: Long Term Improvements - 2029 (2.5 MGD, 6798 ppd BOD, 754 ppd NH3)
NWRF produces class B liquid with lime stabilization for 48% solids
NWRF LT S2

O&M Costs for NWRF 2012 per Jon Mays		Liquid	Solids	
Total Annual Cost	$ 995,000	$ -	$ -	0
Operations Staff	$ 260,000	$ 221,000	$ 39,000	15% devoted to solids
Electricity	$ 230,000	$ 153,410	$ 76,590	33% devoted to solids
Chemical Costs	$ 190,000	$ -	$ 190,000	100% devoted to solids
Gas Costs	$ 30,000	$ 5,000	$ 25,000	0
Other	$ 285,000	$ 285,000	$ -	100% devoted to liquid

Average influent flow for 2012 to NWRF was 1.08MGD which is close to 0.9 MGD used in this alternative. Use 2012 O&M costs for this alternative and assume the lime stabilization will produce a Class B liquid.

Assume WTP stops discharging Alum Sludge to NWRF after 4 years

CALCULATIONS:

Capital Costs

See Opinion of Probable Costs Worksheet
Assume no additional capital costs for existing NWRF solids system

Total Capital Costs **$207,575**

Annual O&M Costs

(2) NWRF Operations Costs

Electric Costs	$ 76,590	per year
Operations Staff	$ 39,000	per year
Chemical Usage	$ 190,000	per year
Gas Usage	$ -	per year

Total Influent Flow	2.5
SWRF	1.3
NWRF	1.2

Lime no Alum 300 lbs/DT

Polymer no Alum 0 lbs/DT

Assume Liquid haul all year
Assume staff and electric cost are similar to cost in 2012 for1.2 MGD influent flow

Year	Electric and Gas Cost	Staff	Solids Disp	Chemical	O&M Cost	P/F
2024	$ 103,480	$ 50,443	$ 319,619	$ 25,205	$ 498,747	$ 385,604
2025	$ 106,998	$ 51,906	$ 346,365	$ 27,169	$ 532,439	$ 400,052
2026	$ 110,636	$ 53,411	$ 375,349	$ 29,288	$ 568,684	$ 415,243
2027	$ 114,398	$ 54,960	$ 406,758	$ 31,571	$ 607,687	$ 431,217
2028	$ 118,288	$ 56,554	$ 440,795	$ 34,032	$ 649,669	$ 448,015
2029	$ 122,309	$ 58,194	$ 477,681	$ 36,685	$ 694,870	$ 465,681

2.50% Concentratio		PPD at each plant										Liquid Haul Cost			Lime Cost			Polymer Cost		
Sludge Produced (ppd)		SWRF		NWRF		Liquid to Haul		SWRF (gpd)		52% NWRF (gpd)	48%	NWRF			NWRF			NWRF		
Alum	No alum	Alum	No alum	Alum	No alum	Alum	No Alum	Alum	No Alum	Alum	No Alum	Summer	Winter	$/WT	$/gal	Summer	Winter	$/Ton	Summer	Winter	$/lb
7822	6258	4067	3254	3755	3004	37493	29994	19496	15597	17997	14397	$ 876	$ 876	$ 28	$ 0.061	$ 69	$ 69	307	$ -	$ -	$ 1.82
8135	6508	4230	3384	3905	3124	38993	31194	20276	16221	18716	14973	$ 949	$ 949	$ 29	$ 0.063	$ 74	$ 74	318	$ -	$ -	$ 1.89
8460	6768	4399	3519	4061	3249	40552	32442	21087	16870	19465	15572	$ 1,028	$ 1,028	$ 30	$ 0.066	$ 80	$ 80	329	$ -	$ -	$ 1.96
8799	7039	4575	3660	4223	3379	42174	33740	21931	17545	20244	16195	$ 1,114	$ 1,114	$ 31	$ 0.069	$ 86	$ 86	341	$ -	$ -	$ 2.03
9151	7320	4758	3807	4392	3514	43861	35089	22808	18246	21054	16843	$ 1,208	$ 1,208	$ 32	$ 0.072	$ 93	$ 93	354	$ -	$ -	$ 2.10
9517	7613	4949	3959	4566	3654	45616	36493	23720	18976	21896	17517	$ 1,309	$ 1,309	$ 34	$ 0.075	$ 101	$ 101	367	$ -	$ -	$ 2.18

Total NPW O&M Costs **$2,545,811** 2024 - 2029 only

CONCLUSION:

Present Worth Analysis

Years Considered in NPV	8 yrs
Interest Rate used for NPV	2.90%

Cost Type	Year	Total Cost	Discount Factor	Present Value
Capital Cost	0	$ 207,575	1.00	$ 207,575
Total O&M Cost				$ 2,545,811
Net Present Worth				**$ 2,754,000**

Opinion of Probable Construction Costs

Long Term Improvements - 2029 (2.5 MGD, 6798 ppd BOD, 754 ppd NH3)
NWRF produces class B liquid with lime stabilization for 48% solids
NWRF LT S2

Division	Description	Quantity	Units	Cost per Unit ($)	Installation Multiplier	Cost (nearest $100)
3	**CONCRETE**					**0**
	Concrete area around sludge load out station	1	LS	10,000	1.0	10,000
11	**EQUIPMENT**					**83,000**
	New submersible feed pumps to pump sludge to truck	1	EA	14,600	1.3	19,000
	New Pumps to pump supernatant back to plant	1	EA	14,600	1.3	19,000
	New sludge load out station	1	LS	5,000	1.0	5,000
	Floating Decanters for Feed Tanks	1	LS	40,000	1.0	40,000
14	**HOISTS AND CRANES**					**5,000**
	New Davit crane	1	EA	5,000.00	1.0	5,000
15	**MECHANICAL / HVAC**					**10,000**
	Piping for pumps to load out station	1	LS	10,000	1.0	10,000
16	**ELECTRICAL and INSTRUMENTATION & CONTROLS**					**15,000**
	Electrical work to support pumps	1	LS	15,000	1.0	15,000
					SUBTOTAL 1	**113,000**
	CONSTRUCTION PRORATES(See Note 1)	18.0%	of Subtotal 1	20,340	1.0	20,400
	CONTRACTOR'S OVERHEAD & PROFIT (See Note 2)	15.0%	of Subtotal 1	16,950	1.0	17,000
					SUBTOTAL 2	**150,400**
	CONTINGENCY (See Note 4)	20.0%	of Subtotal 2	30,080	1.0	30,100
					SUBTOTAL 3	**180,500**
	ENGINEERING COSTS	15.0%	of Subtotal 3	27,075	1.0	27,075
					TOTAL	**207,575**

Notes

1 Construction Prorates [(a) (b)] — 18%

(a) General conditions includes cost associated with permits, licenses, insurance, environmental safe guards, sediment and drainage control, and special construction practices to maintain continued plant operations. Also includes misc construction materials needed for project not included above

2 Contractor's Overhead & Profit [(a)] — 15.0%

(a) Contractor's overhead and profit include costs for mobilization/demobilization, administration, and contractor/subcontractor overhead costs and profits.

4 Design Contingency [(a)] — 20.0%

(a) The design continency is added to the subtotal based on the conceptual nature of information developed for this evaluation.

5 Engineering Costs — 15%

Costs incurred during Final Design and Construction

OBJECTIVE: Calculate the Capital and O&M costs associated with alternative operation

GIVEN: Long Term Improvements - 2029 (2.5 MGD, 6798 ppd BOD, 754 ppd NH3)
NWRF treats 2.5 MGD, 6798 ppd BOD, 754 ppd NH3 for TIN<10
NWRF LT L2

O&M Costs for NWRF 2012 per Jon Mays		Liquid	Solids	
Total Annual Cost	$ 995,000	$ -	$ -	0
Operations Staff	$ 260,000	$ 221,000	$ 39,000	15% devoted to solids
Electricity	$ 230,000	$ 153,410	$ 76,590	33% devoted to solids
Chemical Costs	$ 190,000	$ -	$ 190,000	100% devoted to solids
Gas Costs	$ 30,000	$ 5,000	$ 25,000	0
Other	$ 285,000	$ 285,000	$ -	100% devoted to liquid

Average influent flow for 2012 to NWRF was 1.08MGD which is close to 1.09 MGD used in this alternative. Use 2012 O&M costs for this alternative and assume the FKC press can continue to produce a Class A product.

CALCULATIONS:

Capital Costs

See Opinion of Probable Costs Worksheet
Assume no additional capital costs for existing NWRF solids system

Total Capital Costs **$641,010**

Annual O&M Costs

Annual Electric Usage	Escalation Factor	2.00%
Annual Staff Usage	Escalation Factor	0.50%
Annual Other	Escalation Factor	0.50%

Year	Electric Cost	Staff	Other	Gas	O&M Cost	P/F
2024	$ 246,274	$ 399,687	$ 385,061	$ 6,755	$ 1,037,778	$ 802,354
2025	$ 259,573	$ 413,277	$ 398,153	$ 6,985	$ 1,077,988	$ 809,954
2026	$ 273,590	$ 427,328	$ 411,690	$ 7,223	$ 1,119,831	$ 817,680
2027	$ 288,364	$ 441,857	$ 425,688	$ 7,468	$ 1,163,377	$ 825,536
2028	$ 303,936	$ 456,880	$ 440,161	$ 7,722	$ 1,208,699	$ 833,525
2029	$ 320,348	$ 472,414	$ 455,127	$ 7,985	$ 1,255,874	$ 841,649

Total NPW O&M Costs **$4,930,697** 2024 - 2023 only

CONCLUSION:

Present Worth Analysis

Years Considered in NPV	8 yrs
Interest Rate used for NPV	2.90%

Cost Type	Year	Total Cost	Discount Factor	Present Value
Capital Cost	0	$ 641,010	1.00	$ 641,010
Total O&M Cost				$ 4,930,697
Net Present Worth				**$ 5,572,000**

Opinion of Probable Construction Costs

Long Term Improvements - 2029 (2.5 MGD, 6798 ppd BOD, 754 ppd NH3)
NWRF treats 2.5 MGD, 6798 ppd BOD, 754 ppd NH3 for TIN<10
NWRF LT L2

Division	Description	Quantity	Units	Cost per Unit ($)	Installation Multiplier	Cost (nearest $100)
1	**GENERAL CONDITIONS**					
11	**EQUIPMENT**					**329,200**
	Install new RAS Pump	1	EA	22,430	1.5	33,700
	Modify the RAS and IR pipe spliting	1	LS	100,000	1.0	100,000
	Install second Band Screen	1	EA	177,723	1.1	195,500
16	**ELECTRICAL and INSTRUMENTATION & CONTROLS**					**20,000**
	Cost to provide controls to split RAS	1	LS	20,000	1.0	20,000
					SUBTOTAL 1	**349,200**
	CONSTRUCTION PRORATES(See Note 1)	18.0%	of Subtotal 1	62,856	1.0	62,900
	CONTRACTOR'S OVERHEAD & PROFIT (See Note 2)	15.0%	of Subtotal 1	52,380	1.0	52,400
					SUBTOTAL 2	**464,500**
	CONTINGENCY (See Note 4)	20.0%	of Subtotal 2	92,900	1.0	92,900
					SUBTOTAL 3	**557,400**
	ENGINEERING COSTS (Site Application Process)	15.0%	of Subtotal 3	83,610	1.0	83,610
					TOTAL	**641,010**

Notes

1 Construction Prorates [(a) (b)] 18%

(a) General conditions includes cost associated with permits, licenses, insurance, environmental safe guards, sediment and drainage control, and special construction practices to maintain continued plant operations. Also includes misc construction materials needed for project not included above

2 Contractor's Overhead & Profit [(a)] 15.0%

(a) Contractor's overhead and profit include costs for mobilization/demobilization, administration, and contractor/subcontractor overhead costs and profits.

4 Design Contingency [(a)] 20.0%

(a) The design continency is added to the subtotal based on the conceptual nature of information developed for this evaluation.

5 Engineering Costs 15%

Costs incurred during Final Design and Construction

OBJECTIVE: Calculate the Capital and O&M costs associated with alternative operation

GIVEN: Long Term Improvements - 2029 (2.5 MGD, 6798 ppd BOD, 754 ppd NH3)
NWRF produces class A cake with FKC screw press for 100% of solids
NWRF LT S3

O&M Costs for NWRF 2012 per Jon Mays		Liquid	Solids	
Total Annual Cost	$ 995,000	$ -	$ -	0
Operations Staff	$ 260,000	$ 221,000	$ 39,000	15% devoted to solids
Electricity	$ 230,000	$ 153,410	$ 76,590	33% devoted to solids
Chemical Costs	$ 190,000	$ -	$ 190,000	100% devoted to solids
Gas Costs	$ 30,000	$ 5,000	$ 25,000	0
Other	$ 285,000	$ 285,000	$ -	100% devoted to liquid

Average influent flow for 2012 to NWRF was 1.08MGD which is close to 0.9 MGD used in this alternative. Use 2012 O&M costs for this alternative and assume the FKC press can continue to produce a Class A product.

CALCULATIONS:

Capital Costs

See Opinion of Probable Costs Worksheet

Total Capital Costs **$1,468,205**

Annual O&M Costs

(2) NWRF Operations Costs

Electric Costs	$	76,590	per year
Operations Staff	$	39,000	per year
Chemical Usage	$	190,000	per year
Gas Usage	$	25,000	per year

Assume Cake for 6 months and Liquid for 6 months until 2019 when WTP stops sending Alum Sludge (30% cake)

Annual Electric Usage	Escalation Factor	2.00%
Annual Staff Usage	Escalation Factor	0.50%

Total Influent Flow	2.5
SWRF	0
NWRF	2.5
Cake %	30%

Lime no Alum 300 lbs/DT

Polymer no Alum 40 lbs/DT

Year	Electric and Gas Cost	Staff	Solids Disp	Chemical	O&M Cost	P/F
2024	$ 163,086	$ 52,693	$ 104,740	$ 135,768	$ 456,286	$ 352,776
2025	$ 171,893	$ 54,484	$ 113,504	$ 146,352	$ 486,233	$ 365,334
2026	$ 181,175	$ 56,337	$ 123,002	$ 157,762	$ 518,275	$ 378,435
2027	$ 190,958	$ 58,252	$ 133,295	$ 170,061	$ 552,566	$ 392,103
2028	$ 201,270	$ 60,233	$ 144,449	$ 183,319	$ 589,270	$ 406,364
2029	$ 212,139	$ 62,281	$ 156,537	$ 197,610	$ 628,566	$ 421,246

2.50%Concentratior		PPD at each plant												Cake haul				Lime Cost			Polymer Cost		
Sludge Produced (ppd)		SWRF (ppd)		NWRF (ppd)		ppd	Liquid to Haul (gpd)		SWRF (gpd) 0%		NWRF (gpd) 100%		NWRF				NWRF			NWRF		
Alum	No alum	Alum	No alum	Alum	No alum	Lime added	Alum	No Alum	Alum	No Alum	Alum	No Alum	Summer	Winter	$/WT	$/gal	Summer	Winter	$/Ton	Summer	Winter	$/lb
7822	6258	0	0	7822	6258	0	37493	29994	0	0	37493	29994	$ 287	$ 287	$ 28	$ -	$ 144	$ 144	307	$ 228	$ 228	$ 1.82
8135	6508	0	0	8135	6508	0	38993	31194	0	0	38993	31194	$ 311	$ 311	$ 29	$ -	$ 155	$ 155	318	$ 246	$ 246	$ 1.89
8460	6768	0	0	8460	6768	0	40552	32442	0	0	40552	32442	$ 337	$ 337	$ 30	$ -	$ 167	$ 167	329	$ 265	$ 265	$ 1.96
8799	7039	0	0	8799	7039	0	42174	33740	0	0	42174	33740	$ 365	$ 365	$ 31	$ -	$ 180	$ 180	341	$ 286	$ 286	$ 2.03
9151	7320	0	0	9151	7320	0	43861	35089	0	0	43861	35089	$ 396	$ 396	$ 32	$ -	$ 194	$ 194	354	$ 308	$ 308	$ 2.10
9517	7613	0	0	9517	7613	0	45616	36493	0	0	45616	36493	$ 429	$ 429	$ 34	$ -	$ 209	$ 209	367	$ 332	$ 332	$ 2.18

Total NPW O&M Costs **$2,316,257** 2015 - 2029 only

CONCLUSION:

Present Worth Analysis

Years Considered in NPV	8	yrs
Interest Rate used for NPV	2.90%	

Cost Type	Year	Total Cost	Discount Factor	Present Value
Capital Cost	0	$ 1,468,205	1.00	$ 1,468,205
Total O&M Cost				$ 2,316,257
Net Present Worth				**$ 3,785,000**

Opinion of Probable Construction Costs

Long Term Improvements - 2029 (2.5 MGD, 6798 ppd BOD, 754 ppd NH3)
NWRF produces class A cake with FKC screw press for 100% of solids
NWRF LT S3

Division	Description	Quantity	Units	Cost per Unit ($)	Installation Multiplier	Cost (nearest $100)
11	**EQUIPMENT**					**609,900**
	New FKC Screw Press/Poly System/Conveyor	1	LS	459,500	1.3	597,400
	New Screw Press Pump	1	EA	10,400	1.2	12,500
15	**MECHANICAL / HVAC**					**20,000**
	Piping around new pump and screw press	1	LS	20,000	1.0	20,000
16	**ELECTRICAL and INSTRUMENTATION & CONTROLS**					**170,000**
	Electrical work to support pumps and screw press	1	LS	40,000	1.0	40,000
	New Control panel for FKC Screw Press System	1	LS	130,000	1.0	130,000
					SUBTOTAL 1	**799,900**
	CONSTRUCTION PRORATES(See Note 1)	18.0%	of Subtotal 1	143,982	1.0	144,000
	CONTRACTOR'S OVERHEAD & PROFIT (See Note 2)	15.0%	of Subtotal 1	119,985	1.0	120,000
					SUBTOTAL 2	**1,063,900**
	CONTINGENCY (See Note 4)	20.0%	of Subtotal 2	212,780	1.0	212,800
					SUBTOTAL 3	**1,276,700**
	ENGINEERING COSTS	15.0%	of Subtotal 3	191,505	1.0	191,505
					TOTAL	**1,468,205**

Notes

1 Construction Prorates [(a) (b)] 18%

(a) General conditions includes cost associated with permits, licenses, insurance, environmental safe guards, sediment and drainage control, and special construction practices to maintain continued plant operations. Also includes misc construction materials needed for project not included above

2 Contractor's Overhead & Profit [(a)] 15.0%

(a) Contractor's overhead and profit include costs for mobilization/demobilization, administration, and contractor/subcontractor overhead costs and profits.

4 Design Contingency [(a)] 20.0%

(a) The design continency is added to the subtotal based on the conceptual nature of information developed for this evaluation.

5 Engineering Costs 15%

Costs incurred during Final Design and Construction

OBJECTIVE: Calculate the Capital and O&M costs associated with alternative operation

GIVEN: Long Term Improvements - 2029 (2.5 MGD, 6798 ppd BOD, 754 ppd NH3)
NWRF produces class B cake with aerobic digestion for 100% of solids
NWRF LT S4

O&M Costs for NWRF 2012 per Jon Mays		Liquid	Solids	
Total Annual Cost	$ 995,000	$ -	$ -	0
Operations Staff	$ 260,000	$ 221,000	$ 39,000	15% devoted to solids
Electricity	$ 230,000	$ 153,410	$ 76,590	33% devoted to solids
Chemical Costs	$ 190,000	$ -	$ 190,000	100% devoted to solids
Gas Costs	$ 30,000	$ 5,000	$ 25,000	0
Other	$ 285,000	$ 285,000	$ -	100% devoted to liquid

Average influent flow for 2012 to NWRF was 1.08MGD which is close to 0.9 MGD used in this alternative. Use 2012 O&M costs for this alternative and assume the aerobic digester produces a Class B product.

Assume Enhanced Aerobic Digestion with thickening prior to digester

	ppd	gpd		
Biosolids Production at NWRF 2029	7,613	30,411	Concentrat	3%

Check Digester Volume Required
Use equation 14-22 on page 1537 Metcalf and Eddy

Daily Flow Rate to Digester	30411	gpd	
Daily Solids Rate to Digester	7613		
Influent TSS	30000	mg/l	
Digester Concentration	25000	mg/l	Assume some solids reductino
Reaction Rate Constant	0.05	d^-1	from metcalf and eddy
VSS/TSS in Digester	0.75		
SRT required	42	days	**at 15 deg per Appendix E in 503**
Volume Required =	595,222	gallons	
SRT required for tanks in series	42	days	
Volume Required for Aerobic Digest	1,277,246	gal	
Digester Depth	18	ft	
Digester Width	100	ft	walls (CY) 290
Digester Length	45	ft	slabs (CY) 500
			Total (CY) 790
Total Digester Volume	605,880	gal	
Aeration Requirements	30	scfm/1000cf	
Total Air Required	2,430	SCFM	

CALCULATIONS:

Capital Costs

See Opinion of Probable Costs Worksheet

Total Capital Costs **$3,486,915**

Annual O&M Costs

(2) NWRF Operations Costs

Electric Costs	$ 230,000	per year	Air requirement for Aerobic digestion similar to exist IFAS
Operations Staff	$ 39,000	per year	
Chemical Usage	$ 190,000	per year	

Assume Cake for 6 months and Liquid for 6 months until 2019 when WTP stops sending Alum Sludge (30% cake)

Annual Electric Usage	Escalation Factor	2.00%
Annual Staff Usage	Escalation Factor	0.50%

Total Influent Flow	2.5	
SWRF	0	
NWRF	2.5	
Cake %	20%	

Thickenig Poly	10	lbs/DT
Dewatering Poly	30	lbs/DT
Total Poly	40	lbs/DT

Year	Electric Cost	Staff	Solids Disp	Chemical	O&M Cost	P/F
2024	$ 369,227	$ 52,693	$ 258,404	$ 104,073	$ 784,396	$ 606,453
2025	$ 389,165	$ 54,484	$ 280,027	$ 112,186	$ 835,862	$ 628,031
2026	$ 410,180	$ 56,337	$ 303,459	$ 120,932	$ 890,908	$ 650,525
2027	$ 432,330	$ 58,252	$ 328,853	$ 130,360	$ 949,795	$ 673,977
2028	$ 455,676	$ 60,233	$ 356,371	$ 140,523	$ 1,012,803	$ 698,433
2029	$ 480,282	$ 62,281	$ 386,193	$ 151,478	$ 1,080,233	$ 723,940

2.50%	PPD at each plant						Cake Haul NWRF				Polymer Cost NWRF		
ge Produced (	SWRF (ppd)		NWRF (ppd)	uid to Haul (gp	SWRF (gpd)	NWRF (gpd)							
Alum	Alum		Alum	Alum	Alum	Alum	Summer	Winter	$/WT	$/gal	Summer	Winter	$/lb
7822	0		7822	37493	0	37493	$ 708	$ 708	$ 36	$ -	$ 285	$ 285	$ 1.82
8135	0		8135	38993	0	38993	$ 767	$ 767	$ 38	$ -	$ 307	$ 307	$ 1.89
8460	0		8460	40552	0	40552	$ 831	$ 831	$ 39	$ -	$ 331	$ 331	$ 1.96
8799	0		8799	42174	0	42174	$ 901	$ 901	$ 41	$ -	$ 357	$ 357	$ 2.03
9151	0		9151	43861	0	43861	$ 976	$ 976	$ 43	$ -	$ 385	$ 385	$ 2.10
9517	0		9517	45616	0	45616	$ 1,058	$ 1,058	$ 44	$ -	$ 415	$ 415	$ 2.18

Total NPW O&M Costs **$3,981,359** 2024 - 2029 only

CONCLUSION:

Present Worth Analysis

Years Considered in NPV	8	yrs
Interest Rate used for NPV	2.90%	

Cost Type	Year	Total Cost	Discount Factor	Present Value
Capital Cost	0	$3,486,915	1.00	$ 3,486,915
Total O&M Cost				$ 3,981,359
Net Present Worth				**$ 7,469,000**

Opinion of Probable Construction Costs

Long Term Improvements - 2029 (2.5 MGD, 6798 ppd BOD, 754 ppd NH3)
NWRF produces class B cake with aerobic digestion for 100% of solids
NWRF LT S4

Division	Description	Quantity	Units	Cost per Unit ($)	Installation Multiplier	Cost (nearest $100)
2	**CIVIL / SITEWORK**					**55,000**
	Excavation	1	LS	15,000	1.0	15,000
	Const Dewatering	1	LS	40,000	1.0	40,000
3	**CONCRETE**					**458,200**
	Concrete for Aerobic Digester	790	CY	580.00	1.0	458,200
4	**MASONRY**					**360,000**
	Masonry Building for blowers and RDT (All Trades)	1800	SF	200.00	1.0	360,000
11	**EQUIPMENT**					**946,500**
	New RDT and flocculation tank	1	LS	90,000	1.0	90,000
	TWAS feed pump	1	EA	10,400	1.2	12,500
	New Blower for Digester	3	EA	80,000	1.0	240,000
	Coarse bubble diffusers	1	LS	80,000	1.0	80,000
	New screw press	1	LS	500,000	1.0	500,000
	Polymer System	1	LS	20,000	1.2	24,000
15	**MECHANICAL / HVAC**					**20,000**
	Piping around new pump and screw press	1	LS	20,000	1.0	20,000
16	**ELECTRICAL and INSTRUMENTATION & CONTROLS**					**60,000**
	Electrical work to support pumps and screw press	1	LS	60,000	1.0	60,000
					SUBTOTAL 1	**1,899,700**
	CONSTRUCTION PRORATES(See Note 1)	18.0%	of Subtotal 1	341,946	1.0	342,000
	CONTRACTOR'S OVERHEAD & PROFIT (See Note 2)	15.0%	of Subtotal 1	284,955	1.0	285,000
					SUBTOTAL 2	**2,526,700**
	CONTINGENCY (See Note 4)	20.0%	of Subtotal 2	505,340	1.0	505,400
					SUBTOTAL 3	**3,032,100**
	ENGINEERING COSTS	15.0%	of Subtotal 3	454,815	1.0	454,815
					TOTAL	**3,486,915**

Notes

1 Construction Prorates [(a) (b)] 18%

(a) General conditions includes cost associated with permits, licenses, insurance, environmental safe guards, sediment and drainage control, and special construction practices to maintain continued plant operations. Also includes misc construction materials needed for project not included above

2 Contractor's Overhead & Profit [(a)] 15.0%

(a) Contractor's overhead and profit include costs for mobilization/demobilization, administration, and contractor/subcontractor overhead costs and profits.

4 Design Contingency [(a)] 20.0%

(a) The design continency is added to the subtotal based on the conceptual nature of information developed for this evaluation.

5 Engineering Costs 15%

Costs incurred during Final Design and Construction

Appendix L

Calculations by: NAW

OBJECTIVE: Calculate the Capital and O&M costs associated with alternative operation

GIVEN: Long Term Improvements - 2029 (2.5 MGD, 6798 ppd BOD, 754 ppd NH3)
NWRF produces class B liquid with lime stabilization for 100% of solids
NWRF LT S5

O&M Costs for NWRF 2012 per Jon Mays		Liquid	Solids	
Total Annual Cost	$ 995,000	$ -	$ -	0
Operations Staff	$ 260,000	$ 221,000	$ 39,000	15% devoted to solids
Electricity	$ 230,000	$ 153,410	$ 76,590	33% devoted to solids
Chemical Costs	$ 190,000	$ -	$ 190,000	100% devoted to solids
Gas Costs	$ 30,000	$ 5,000	$ 25,000	0
Other	$ 285,000	$ 285,000	$ -	100% devoted to liquid

Average influent flow for 2012 to NWRF was 1.08MGD which is close to 0.9 MGD used in this alternative. Use 2012 O&M costs for this alternative and assume the lime stabilization will produce a Class B liquid.

Assume WTP stops discharging Alum Sludge to NWRF after 4 years

CALCULATIONS:

Capital Costs

See Opinion of Probable Costs Worksheet
Assume no additional capital costs for existing NWRF solids system

Total Capital Costs **$455,285**

Annual O&M Costs

(2) NWRF Operations Costs

Annual Electric Usage Escalation Factor 2.00%
Annual Staff Usage Escalation Factor 0.50%

Total Influent Flow	2.5
SWRF	0
NWRF	2.5
Cake %	0%

Lime no Alum 300 lbs/DT

Assume Liquid haul all year

Year	Electric and Gas Cost	Staff	Solids Disp	Chemical	O&M Cost	P/F
2024	$ 122,953	$ 52,693	$ 475,624	$ 52,509	$ 703,778	$ 544,123
2025	$ 129,592	$ 54,484	$ 515,424	$ 56,603	$ 756,103	$ 568,103
2026	$ 136,590	$ 56,337	$ 558,555	$ 61,016	$ 812,497	$ 593,270
2027	$ 143,966	$ 58,252	$ 605,294	$ 65,773	$ 873,285	$ 619,686
2028	$ 151,740	$ 60,233	$ 655,945	$ 70,900	$ 938,818	$ 647,413
2029	$ 159,934	$ 62,281	$ 710,835	$ 76,428	$ 1,009,477	$ 676,521

3.50% Concentratio		PPD at each plant										Liquid Haul Cost				Lime Cost		
Sludge Produced (ppd)		SWRF		NWRF		Liquid to Haul		SWRF (gpd)		0% NWRF (gpd)	100%	NWRF				NWRF		
Alum	No alum	Alum	No alum	Alum	No alum	Alum	No Alum	Alum	No Alum	Alum	No Alum	Summer	Winter	$/WT	$/gal	Summer	Winter	$/Ton
7822	6258	0	0	7822	6258	26781	21425	0	0	26781	21425	$ 1,303	$ 1,303	$ -	$ 0.061	$ 144	$ 144	307
8135	6508	0	0	8135	6508	27852	22282	0	0	27852	22282	$ 1,412	$ 1,412	$ -	$ 0.063	$ 155	$ 155	318
8460	6768	0	0	8460	6768	28966	23173	0	0	28966	23173	$ 1,530	$ 1,530	$ -	$ 0.066	$ 167	$ 167	329
8799	7039	0	0	8799	7039	30125	24100	0	0	30125	24100	$ 1,658	$ 1,658	$ -	$ 0.069	$ 180	$ 180	341
9151	7320	0	0	9151	7320	31330	25064	0	0	31330	25064	$ 1,797	$ 1,797	$ -	$ 0.072	$ 194	$ 194	354
9517	7613	0	0	9517	7613	32583	26066	0	0	32583	26066	$ 1,947	$ 1,947	$ -	$ 0.075	$ 209	$ 209	367

Total NPW O&M Costs **$3,649,117** 2024 - 2029 only

CONCLUSION:

Present Worth Analysis

Years Considered in NPV 8 yrs
Interest Rate used for NPV 2.90%

Cost Type	Year	Total Cost	Discount Factor	Present Value
Capital Cost	0	$ 455,285	1.00	$ 455,285
Total O&M Cost				$ 3,649,117
Net Present Worth				**$ 4,105,000**

Opinion of Probable Construction Costs

Long Term Improvements - 2029 (2.5 MGD, 6798 ppd BOD, 754 ppd NH3)
NWRF produces class B liquid with lime stabilization for 100% of solids
NWRF LT S5

Division	Description	Quantity	Units	Cost per Unit ($)	Installation Multiplier	Cost (nearest $100)
3	**CONCRETE**					**0**
	Concrete area around sludge load out station	1	LS	10,000	1.0	10,000
11	**EQUIPMENT**					**203,000**
	New submersible feed pumps to pump sludge to truck	1	EA	14,600	1.3	19,000
	New pumps to pump supernatant back to head of plant	1	EA	14,600	1.3	19,000
	New sludge load out station	1	LS	5,000	1.0	5,000
	Floating Decanters for Feed Tanks	1	LS	40,000	1.0	40,000
	New RDT and flocculation tank	1	LS	90,000	1.0	90,000
	TWAS feed pump	1	LS	15,000	1.0	15,000
	New RDT feed pumps	1	LS	15,000	1.0	15,000
14	**HOISTS AND CRANES**					**5,000**
	New Davit crane	1	EA	5,000	1.0	5,000
15	**MECHANICAL / HVAC**					**10,000**
	Piping for pumps to load out station	1	LS	10,000	1.0	10,000
16	**ELECTRICAL and INSTRUMENTATION & CONTROLS**					**30,000**
	Electrical work to support pumps	1	LS	30,000	1.0	30,000
					SUBTOTAL 1	**248,000**
	CONSTRUCTION PRORATES(See Note 1)	18.0%	of Subtotal 1	44,640	1.0	44,700
	CONTRACTOR'S OVERHEAD & PROFIT (See Note 2)	15.0%	of Subtotal 1	37,200	1.0	37,200
					SUBTOTAL 2	**329,900**
	CONTINGENCY (See Note 4)	20.0%	of Subtotal 2	65,980	1.0	66,000
					SUBTOTAL 3	**395,900**
	ENGINEERING COSTS	15.0%	of Subtotal 3	59,385	1.0	59,385
					TOTAL	**455,285**

Notes

1 Construction Prorates [(a) (b)] — 18%

(a) General conditions includes cost associated with permits, licenses, insurance, environmental safe guards, sediment and drainage control, and special construction practices to maintain continued plant operations. Also includes misc construction materials needed for project not included above

2 Contractor's Overhead & Profit [(a)] — 15.0%

(a) Contractor's overhead and profit include costs for mobilization/demobilization, administration, and contractor/subcontractor overhead costs and profits.

4 Design Contingency [(a)] — 20.0%

(a) The design continency is added to the subtotal based on the conceptual nature of information developed for this evaluation.

5 Engineering Costs — 15%

Costs incurred during Final Design and Construction

OBJECTIVE: Calculate the Capital and O&M costs associated with alternative operation

GIVEN: Long Term Improvements - 2029 (2.5 MGD, 6798 ppd BOD, 754 ppd NH3)
NWRF produces class A cake with Schwing lime stabilization for 100% of solids
NWRF LT S6

O&M Costs for NWRF 2012 per Jon Mays		Liquid	Solids	
Total Annual Cost	$ 995,000	$ -	$ -	0
Operations Staff	$ 260,000	$ 221,000	$ 39,000	15% devoted to solids
Electricity	$ 230,000	$ 153,410	$ 76,590	33% devoted to solids
Chemical Costs	$ 190,000	$ -	$ 190,000	100% devoted to solids
Gas Costs	$ 30,000	$ 5,000	$ 25,000	0
Other	$ 285,000	$ 285,000	$ -	100% devoted to liquid

Average influent flow for 2012 to NWRF was 1.08MGD which is close to 0.9 MGD used in this alternative. Use 2012 O&M costs for this alternative and assume the FKC press can continue to produce a Class A product.

CALCULATIONS:

Capital Costs

See Opinion of Probable Costs Worksheet

Total Capital Costs **$2,035,270**

Annual O&M Costs

(2) NWRF Operations Costs

Electric Costs	$ 76,590	per year
Operations Staff	$ 39,000	per year
Chemical Usage	$ 190,000	per year
Gas Usage	$ 25,000	per year

Assume Cake for 6 months and Liquid for 6 months until 2019 when WTP stops sending Alum Sludge (30% cake)

Annual Electric Usage	Escalation Factor	2.00%
Annual Staff Usage	Escalation Factor	0.50%

Total Influent Flow	2.5	
SWRF	0	
NWRF	2.5	
Cake %	25%	

Lime Usage Winter	1100	lbs/DT
Lime Usage Summer	1100	lbs/DT
Lime no Alum	1100	lbs/DT

Polymer Usage Winter	40	lbs/DT
Polymer Usage Summer	40	lbs/DT
Polymer no Alum	40	lbs/DT

Year	Electric	Staff	Solids Disp	Chemical	O&M Cost	P/F
2024	$ 122,953	$ 52,693	$ 194,816	$ 275,793	$ 646,253	$ 499,648
2025	$ 129,592	$ 54,484	$ 211,118	$ 297,293	$ 692,487	$ 520,305
2026	$ 136,590	$ 56,337	$ 228,784	$ 320,470	$ 742,181	$ 541,927
2027	$ 143,966	$ 58,252	$ 247,929	$ 345,454	$ 795,601	$ 564,561
2028	$ 151,740	$ 60,233	$ 268,676	$ 372,386	$ 853,034	$ 588,256
2029	$ 159,934	$ 62,281	$ 291,158	$ 401,417	$ 914,790	$ 613,064

2.50% Concentration		PPD at each plant																											
Sludge Produced (ppd)		SWRF (ppd)		NWRF (ppd)			ppd	Liquid to Haul (gpd)		SWRF (gpd)	0%	NWRF (gpd)	100%	Cake haul NWRF				Lime Cost NWRF				Polymer Cost NWRF			
Alum	No alum	Alum	No alum	Alum	No alum	Lime added		Alum	No Alum	Alum	No Alum	Alum	No Alum	Summer	Winter	$/WT	$/gal	Summer	Winter	$/Ton		Summer	Winter	$/lb	
7822	6258	0	0	7822	6258	3442		37493	29994	0	0	37493	29994	$ 534	$ 534	$ 28	$ -	$ 527	$ 527	307		$ 228	$ 228	$ 1.82	
8135	6508	0	0	8135	6508	3579		38993	31194	0	0	38993	31194	$ 578	$ 578	$ 29	$ -	$ 569	$ 569	318		$ 246	$ 246	$ 1.89	
8460	6768	0	0	8460	6768	3723		40552	32442	0	0	40552	32442	$ 627	$ 627	$ 30	$ -	$ 613	$ 613	329		$ 265	$ 265	$ 1.96	
8799	7039	0	0	8799	7039	3871		42174	33740	0	0	42174	33740	$ 679	$ 679	$ 31	$ -	$ 661	$ 661	341		$ 286	$ 286	$ 2.03	
9151	7320	0	0	9151	7320	4026		43861	35089	0	0	43861	35089	$ 736	$ 736	$ 32	$ -	$ 712	$ 712	354		$ 308	$ 308	$ 2.10	
9517	7613	0	0	9517	7613	4187		45616	36493	0	0	45616	36493	$ 798	$ 798	$ 34	$ -	$ 768	$ 768	367		$ 332	$ 332	$ 2.18	

Total NPW O&M Costs **$3,327,762** 2024 - 2029 only

CONCLUSION:

Present Worth Analysis

Years Considered in NPV	8	yrs
Interest Rate used for NPV	2.90%	

Cost Type	Year	Total Cost	Discount Factor	Present Value
Capital Cost	0	$ 2,035,270	1.00	$ 2,035,270
Total O&M Cost				$ 3,327,762
Net Present Worth				**$ 5,364,000**

Opinion of Probable Construction Costs

Long Term Improvements - 2029 (2.5 MGD, 6798 ppd BOD, 754 ppd NH3)
NWRF produces class A cake with Schwing lime stabilization for 100% of solids
NWRF LT S6

Division	Description	Quantity	Units	Cost per Unit ($)	Installation Multiplier	Cost (nearest $100)
3	**CONCRETE**					**0**
11	**EQUIPMENT**					**1,058,800**
	New Schwing Screw Press/Poly System/Conveyor	1	LS	804,800	1.3	1,046,300
	New Screw Press Pump	1	EA	10,400	1.2	12,500
14	**HOISTS AND CRANES**					**0**
15	**MECHANICAL / HVAC**					**20,000**
	Piping around new pump and screw press	1	LS	20,000	1.0	20,000
16	**ELECTRICAL and INSTRUMENTATION & CONTROLS**					**30,000**
	Electrical work to support pumps and screw press	1	LS	30,000	1.0	30,000
					SUBTOTAL 1	**1,108,800**
	CONSTRUCTION PRORATES(See Note 1)	18.0%	of Subtotal 1	199,584	1.0	199,600
	CONTRACTOR'S OVERHEAD & PROFIT (See Note 2)	15.0%	of Subtotal 1	166,320	1.0	166,400
					SUBTOTAL 2	**1,474,800**
	CONTINGENCY (See Note 4)	20.0%	of Subtotal 2	294,960	1.0	295,000
					SUBTOTAL 3	**1,769,800**
	ENGINEERING COSTS	15.0%	of Subtotal 3	265,470	1.0	265,470
					TOTAL	**2,035,270**

Notes

1 Construction Prorates [(a) (b)] 18%

(a) General conditions includes cost associated with permits, licenses, insurance, environmental safe guards, sediment and drainage control, and special construction practices to maintain continued plant operations. Also includes misc construction materials needed for project not included above

2 Contractor's Overhead & Profit [(a)] 15.0%

(a) Contractor's overhead and profit include costs for mobilization/demobilization, administration, and contractor/subcontractor overhead costs and profits.

4 Design Contingency [(a)] 20.0%

(a) The design continency is added to the subtotal based on the conceptual nature of information developed for this evaluation.

5 Engineering Costs 15%

Costs incurred during Final Design and Construction

THIS PAGE INTENTIONALLY LEFT BLANK

Nick Worley

From: Scott Marshall
Sent: Tuesday, March 04, 2014 4:13 PM
To: Nick Worley
Subject: FW: Town of Erie North WWTF

Categories: Proposal

Nick,

Please see below comments by Hydro and let me know if you need anything else.

Thanks!

Scott

From: Dara Rolfe [mailto:drolfe@hydro-int.com]
Sent: Tuesday, March 04, 2014 11:34 AM
To: Scott Marshall
Cc: Lindsey Schweitzer; Patrick Herrick
Subject: RE: Town of Erie North WWTF

Scott,

See comments below in RED. Let us know if you have any questions.

Regards,

Dara Rolfe
Applications Engineer
Hydro International – Water & Wastewater Solutions
· Direct Dial: 503-615-0708 · Skype: dhazama.hydro

This E-mail is confidential. It may also be legally privileged. If you are not the addressee you may not copy, forward, disclose or use any part of it. If you have received this message in error, please delete it and all copies from your system and notify the sender immediately by return E-mail. Internet communications cannot be guaranteed to be timely, secure, error or virus-free. The sender does not accept liability for any errors or omissions.

From: Patrick Herrick
Sent: Monday, March 03, 2014 9:08 AM
To: Lindsey Schweitzer
Cc: Dara Rolfe
Subject: FW: Town of Erie North WWTF

Lindsey,

See request below.

Pat

From: Scott Marshall [mailto:smarshall@miscowater.com]
Sent: Monday, March 03, 2014 9:22 AM
To: Patrick Herrick
Subject: FW: Town of Erie North WWTF

Pat,

This is for a Master Plan study. Please see below and see if we can answer his grit questions regarding our existing installation in Erie, CO.

Thanks!

Scott A. Marshall, P.E.
Miscowater
651 Corporate Circle, Suite 100
Golden, CO 80401
ph (303) 309-6150
cell (303) 601-5215
smarshall@miscowater.com

From: Nick Worley [mailto:nick@frachetti.com]
Sent: Saturday, March 01, 2014 9:44 PM
To: Scott Marshall
Subject: Town of Erie North WWTF

Scott, I am working on a study for the Town of Erie North WWTF and am looking at providing some costs for future upgrades. I understand they have a Muffin Monster screen with space for a second screen as well as a teacup and snail grit system with some expandability. Please provide the following information:

1. Provide a budget cost for upgrading the grit chamber with additional plates. 7 additional trays: $14,500 .
2. What is the rated capacity of the grit chamber now? 4.2 mgd with 12" headloss and 106 micron cut point.
3. What would be the rated capacity of the grit chamber with all plates installed? 12.9 mgd with 12" headloss and 106 micron cut point.
4. Can the capacity of the grit chamber be increased with a lower grit removal efficiency? If we allowed the grit removal efficiency to drop by 10%, what hydraulic throughput could the grit chamber handle? Hydraulic capacity of the expanded 9 ft 12 tray HeadCell unit is 12.9 mgd.
5. What is the hydraulic capacity of the classifier? Max grit load 1.0 cyd/hr, max grit slurry feed rate from TeaCup 75-85 gpm from the flow controller.
6. Provide a budge cost for the second Muffin Monster screen and control panel.
7. What is the max rated capacity of each screen at the max operating channel depth?

Please let me know if you have any questions. I appreciate your help with this.

Frachetti Engineering
Focused. Engaged. Innovative.
Nick Worley, P.E.
Project Engineer
5325 S Valentia Way
Greenwood Village, CO 80111
Phone: 303.300.3464
Direct: 303.928.1389
www.frachetti.com
nick@frachetti.com

Global Headquarters
290 Paularino Avenue
Costa Mesa, CA 92626 USA
phone (949) 833-3888
toll-free (800) 331-2277
fax (949) 833-8858
jwce@jwce.com

BUDGET INFORMATION MSS PRODUCT LINE

DATE: 3/3/2014

PROJECT: Erie North

Thank you for choosing JWC's screening equipment. Enclosed you will find a specification and drawing based on the design parameters listed below. Please let us know if any of the information below changes. Unless we are given a water level downstream of the screen, the water level will be based on an assumed velocity downstream as shown.

Model	MBS- 8/ 4 (Bandscreen Monster®)
Flow:	12.00 MGD
Channel Width:	2.50 ft
Recess width:	4.00 ft
Channel Depth:	7.00 ft
Discharge Height:	5.50 ft
Water Level downstream:	2.87 ft at peak flow
Water Level up stream:	4.51 ft at peak flow
Velocity up stream:	1.85 fps at peak flow
Headloss blocked 30%:	1.65 ft at peak flow
Perforation Size:	6mm
Weight	3485.625 lbs
BUDGET PRICE PER SCREEN	$177,723

(Freight and service included)

Information not to be used for construction.

Please contact JWC if you have any questions.

WATER TECHNOLOGY GROUP
A COGENT COMPANY

cogentcompanies.com

To: Frachetti Engineers

Date: 03/17/14
Quote: TC14-52

Attn: Nick Worley.
Reference: Town of Erie

Quantity	Description	Price

Submersible Pump
Design Point: 400 GPM @ 32' TDH

1	Flygt pump model NP3153.185 submersible wastewater pump with impeller #462. The impeller and wear plate are constructed of High Chrome Iron for improved wear resistance. The unit will be driven by a 20HP, 1750RPM, 460/3/60 submersible motor with stainless steel cooling jacket and 50' of power cable. The pump includes both a FLS seal leakage sensor and motor over-temperature sensors. The pump has a 4" discharge.
1	4" Discharge connection elbows
2	2" stainless steel guide rail pipes
1	Stainless steel upper guide bar brackets with cable hook designed for 2" guide rail pipe
1	20' length of stainless steel lifting chain with shackles
1	Flygt MiniCAS 120 relay, required for proper operation of the pump sensors.

Your budget price----------$7,313.00

DENVER
6345 DOWNING STREET
DENVER, CO 80216
303-584-9000 MAIN
303-584-9920 FAX
800-875-2515 TOLL FREE

GRAND JUNCTION
2877 GIBRALTER COURT
GRAND JUNCTION, CO 81503
970-773-0411 MAIN
303-584-9920 FAX

MESA
1028 NORTH 24TH STREET
MESA, AZ 85213
480-415-5296 MAIN
480-656-7861 FAX

WATER TECHNOLOGY GROUP
A COGENT COMPANY

cogentcompanies.com

Submersible Pump
Design Point: 3300 GPM @ 9' TDH

1 Flygt pump model NP3153.185 submersible wastewater pump with impeller #622. The impeller and wear plate are constructed of High Chrome Iron for improved wear resistance. The unit will be driven by a 15HP, 1150RPM, 460/3/60 submersible motor with stainless steel cooling jacket and 50' of power cable. The pump includes both a FLS seal leakage sensor and motor over-temperature sensors. The pump has a 10" discharge.

1 10" Discharge connection elbows

2 2" stainless steel guide rail pipes

1 Stainless steel upper guide bar brackets with cable hook designed for 2" guide rail pipe

1 20' length of stainless steel lifting chain with shackles

1 Flygt MiniCAS 120 relay, required for proper operation of the pump sensors.

Your budget price----------$22,109.00

Notes and Clarifications:
1. Equipment sizing and configuration based on information provided.
2. Taxes are not included in the pricing.
3. Anything not specifically listed above is not included.

Terms: Net 30 days with approved credit
Submittal data: Approx 4 weeks
Delivery: Approx 12 weeks after approval
Freight: FOB factory w/ freight charges allowed
Quote valid: 30 days

*Please Note: Delivery estimates are made in good faith but are subject to delays resulting from conditions beyond our control. Liquidated damages are not acceptable without prior approval.

Brian Dieke / Tony Ciancio

DENVER
6345 DOWNING STREET
DENVER, CO 80216
303-584-9000 MAIN
303-584-9920 FAX
800-875-2515 TOLL FREE

GRAND JUNCTION
2877 GIBRALTER COURT
GRAND JUNCTION, CO 81503
970-773-0411 MAIN
303-584-9920 FAX

MESA
1028 NORTH 24TH STREET
MESA, AZ 85213
480-415-5296 MAIN
480-656-7861 FAX

From: Albritton Raymond [mailto:Raymond.Albritton@wilo-usa.com]
Sent: Wednesday, March 05, 2014 9:45 AM
To: shansen@ambienteh2o.com
Cc: Jacobson Bruce; Morris Nick
Subject: 1403049RA - Town of Erie - North WWTF

Steve,

Here is the budget pricing you requested. Please let me know if you need anything else for this application.

	BUDGET ESTIMATE - ANOXIC BASIN MIXER
Quantity	**Description**
1	WILO TR60-2.41-4/12 / 50' POWER and CONTROL CABLE – 7.4hp / 1740rpm motor x 410rpm gear reduced output.
1	Moisture Probe & Cable
1	Thermal Sensor
1	AVU100 X 20' - TYPE 304SS
1	CERAM CO EXTERIOR COATING
1	THERMAL RELAY
1	MOISTURE SENSOR RELAY
1	AVU100 MIXER FRAME
1	CABLE GUIDES
1	BINDER
1	FOOT SUPPORT
	Total List price . . . $ 12,627.00
	NET-BUY OUT ITEMS
1	SS Thern Hoist
1	SS Thern Hoist Base - FLOOR MOUNTED
1	SS Thern Cable 1/4" x 36'
	Total NET_Buy Outs . . . $ 7,200.00
	NET-Extras . . . $ 2,400.00
$ 1,400.00	Start - Up – Per day charge, plus all expenses.
$ 1,000.00	Freight Cost – One time shipment. Additional freight will be charged for more than one delivery.

Thanks,

Raymond Albritton
Water Management Applications
WILO USA LLC
86 Genesis Parkway
Thomasville, GA 31792

T + 229.584.0227

Quotation Submission

Company: Frachetti Engineering
Address:

ATTN: **Nick Worley**
Contact Info: phone
email

Project Name: Town of Erie North WWTF

Xylem Inc.
1725 Brannum Lane
Yellow Springs, OH 45387

Phone: (800) 765-4974
Fax: (937) 767-1058
orders@YSI.com

Date : March 3, 2014
QUOTE # BP20140303-01
Revision:

YSI, a Xylem brand, is pleased to offer the following quotation as per your request.

Part Number	Model	Description	Each	Qty	EXTENDED
Controller					
470016Y	MIQ/TC 2020 XT-H3	System 2020 XT 20 Channel TC 2020 XT Terminal/Controller with 3 Current Outputs & 3 Relay outputs, complete with power supply 100-240 VAC & USB interface. 5 IQ Sensor Net Connections	$2,650	1	$2,650.00
2020 System Modules					
480008Y	MIQ/JB	Passive Junction Box IQ. 4 IQ Sensor Net Connections.	$240	2	$480.00
Cable Assemblies					
480046Y	SNCIQ	IQ Cable, 2 Wire w/Shield, Specify length in meters (1 meter = 3 feet)	$7	33	$231.00
Mounting Hardware for Controllers					
109295Y	SSH/IQ	IQ Sun Shield, Plastic, for 2020 & 182 module mounting, also used for mounting air cleaning box. Requires 109 286Y to mount on hand railing.	$119	2	$238.00
109286Y	MR/SD 170	Pipe mounting kit for SD/M 170, SD/K 170 and SSH/IQsun shields(dia. 25-60 mm)	$96	2	$192.00
480050Y	THS/IQ	Top Hat Rail Mounting for IQ Modules (Din Rail Mounting System)	$36	1	$36.00
480053USY		Adapter, Conduit, Stainless Steel Metric M16 male to 1/2" NPT female	$15	2	$30.00
Sensors					
Ammonium					
107072YK	AmmoLyt Plus set/comp	Ammolyt Plus Ammonium Sensor Armature complete w/Reference Electrode, Ammonium & Potassium Electrodes	$4,400	2	$8,800.00
Nitrate					
107082YK	NitraLyt Plus Set/Comp	NitraLyt Plus Nitrate Sensor Armature complete w/ Reference Electrode, Nitrate & Chloride Electrodes	$4,400	2	$8,800.00
VARiON Plus 700 IQ Combination Sensor for Ammonium and Nitrate					
107066YK	VARiON®PlusAN/A set	VARiON Plus Armature, includes reference electrode, & electrodes for Ammonium, Nitrate & Potassium	$5,430		
Cable Assemblies					
480042Y	SACIQ-7.0	Sensor Connection cable, IQ, 7M, 25Ft.	$120	4	$480.00
Mounting Hardware					
109320Y	EH/U 170	Single sensor holder (Chain Style Mounting, EH/F)	$116	4	$464.00
109323Y	EH2/U 170	Twin sensor holder (Chain Style Mounting)	$185		
109273Y	EH/F 170-2.5	SensoClean Swing mounting assembly, boom length 2.5 m	$284	4	$1,136.00
109281Y	BE/ST 170-R	Vario pipe mounting stand for mounting a EH/F 170 swing or EH/P 170 pendulum assembly directly to a vertical or horizontal rail.	$575	4	$2,300.00

Total **$25,837.00**

Please note the following:

1) This quotation is limited to supplying the equipment described above. It does not include power or current output cable, supports, or other materials except that which are specifically listed above.
2) YSI IQ SensorNet Equipment: Controllers have a 3 year factory warranty, sensors have a two year factory warranty. Consumables for pH have a 6 month warranty, DO consumables have a 2 year warranty.
3) Integrated lightning protection included on all YSI IQ SensorNet products when instruments & sensors are wired with approved IQ Sensornet Cable model SNCIQ.
4) PVC extension poles that suspend the sensors in the process are to be supplied by others.

TERMS: Net 30 Days
FOB: Yellow Springs, OH

Thank you for your interest in Xylem.

Best Regards:

Bill Pnkston

Bill Pinkston
Ambiente H2O Inc.

1500 W. Hamden Ave. Ste. 5D
Sheridan, CO 80110

seepex.com

Offer No. 7713/0007

Frachetti Engineering Nick Worley,

3/4/2014

Item 10

qty. 1

seepex progressive cavity pump
BN 17-6L / A1-C1-C6-F0-GA-X
X= 0804

Application data

Pumped liquid	activated sludge
Viscosity	well flowable
Solids content	max. 1%
Size of solids	assumed screened
Spec. gravity	no advice
Temperature	32 to 113F
pH value	assumed neutral
Composition/Concentr.	no advice
Kind of operation	8h/day
Site of installation	indoors

Performance data

	Flow rate	**Pressure**	**Speed**	
	60 USGPM	12 psi	243 rpm	norm
Starting torque	118 lb.ft			
Max. power absorbed	1.88 hp			
Suction pressure	ass. flooded			
Discharge pressure	12 psi			
Remarks	Tolerances according to seepex standards.			

Materials and executions

Installation	01 H	horizontal
Rotation	02 L	counter clockwise (left)
Lantern / drive casing	04 N	lantern, standard
Lantern / drive casing material	05 A1	EN-JL-1040 (grey cast iron 25)
Wetted casing parts	06 E	standard
Wetted casing parts material	07 A1	EN-JL-1040 (grey cast iron 25)
Joint execution	09 B	encapsulated (closed) joints with universal joint sleeve
Joints material	10 N6	standard
Universal joint sleeve material	11 F0	NBR - Perbunan
Coupling rod	12 N	standard
Coupling rod material	13 C1	1.4021 / 420 SS
Rotor	14 N	standard
Rotor material	15 C6	1.2436 / tool steel AISI D6
Rotor coating	16 1	without
Stator	17 N	standard
Stator material	18 F0	NBR - Perbunan
Shaft sealing	19 GA	mechanical seal, single acting elastomer bellows, either sense of rotation, unbalanced
Shaft seal casing material	20 A6	1.4408 / CF8M / 316 SS

seepex.com

Offer No. 7713/0007

Frachetti Engineering Nick Worley,

Shaft seal material	21 D	rotating seal face: SiC solid stationary seal face: SiC solid elastomers: FPM spring: 1.4571 / 316 TI SS metal parts: 1.4571 / 316 TI SS
Plug-in shaft	22 A	standard
Plug-in shaft material	23 C1	1.4021 / 420 SS
Pump screw fitting	24 A1	standard
Painting	25 1A	standard RAL 5013 (blue)

Connections

Branch / hopper position	03 10	branch / hopper position 1
Casing parts connections	08 04	suction connection flange drilled to ANSI B16,5: DN 4" ANSI B16,5 150lbs discharge connection flange drilled to ANSI B16,5: DN 3" ANSI B16,5 150lbs

Drive

Type	**Geared motor**		
Design	B5		
Gear ratio	i = 6.86		
	Nom.	**Min.**	**Max.**
Output speed (rpm)	248	243	243
Motor speed (rpm)	1700	1667	1667
Frequency (Hz)	60	59	59

Electr. motor

Rated output	5 hp
Rated speed	1700 rpm
Starting	direct on frequency inverter

constant torque inverter required, minimum starting torque to be 1.3 times running torque

Voltage	3 x 230/460V
Frequency	60 Hz
Enclosure	IP55
Thermal class	F

Baseplate

Baseplate	60 B	baseplate for block pump
Baseplate material	61 ST	carbon steel, painted

Price composition	**Unit price**
pump with flanged drive, baseplate	**USD 7758.--**

seepex.com

Offer No. 7713/0007

Frachetti Engineering Nick Worley,

Optional dry-running protection device

Dry running protection device	70 230	TSE 230AC consisting of: - sensor sleeve fitted to the stator of the pump with installed NTC temperature sensor in IP55 connection head inst. in pump stator - TSE control device for installation in a control panel - 220-240V / 50-60 Hz	**USD 983.--**

Optional overpressure protection

Pressure control device	75 PKO3	diaphragm contact pressure gauge - PKOs 100-2, 0-25bar, DN50 PN40 821.2, CPD 010, 24-230V AC/DC - stainless steel casing waterproof design - diaphragm 1.4571 / 316 TI SS - oil filled - casing diameter 100 mm - wetted parts steel - measuring range 0-25bar - standard temperature range up to +70°C - open flange connection DN50 PN40 - single magnetic skipping contact 821.2 - multifunctional relay CPD 010	**USD 1605.--**

Canyon Systems, Inc.
420 Corporate Circle
Suite H
Golden, CO 80401
Phone: 303-987-3838
Representation For The Gorman-Rupp Co.
A Manufacturer Of Pumps And Engineered Pumping Systems

BUDGET PROPOSAL

BASE MOUNTED
CENTRIFUGAL PUMP

Purchaser: Frachetti Engineering For: Erie WWTP

303-928-1389
Attn: Nick Worley

NOTE: *Our Contract includes only the provisions set forth below and the terms & conditions on the final page hereof, including without limitation the reservation of security interest and warranty and liability limitations and price escalation clause.*

Proposal No. 13G03.14Q *Quantity (1)*

DESIGN CONDITIONS: Match Existing
T10A3S-B, (10”x 10”): 2000 GPM @ 10’ TDH (Match Existing Pumps)

EQUIPMENT:
Gorman-Rupp Model T10A3S-B SUPER T-SERIES pump, motor, belts, sheaves, and belt guard to be mounted on a common steel fabricated base. Motor to be mounted in the vertical v-belt configuration.

MOTOR:
15 H.P., 1750 RPM, TEFC, 3 Phase / 460 Volt, Inverter Duty (Match Existing)

NOTES:
1. No offloading, storage, taxes or installation is included.
2. No equipment or services other than those specifically listed above are being provided. Contact Canyon Systems, Inc. for additional information or clarifications.
3. Freight: not included in pricing.

Budget Price…….…… $22,430.00

- Estimated Submittal Time…….. 0 to 1 Weeks (if required)
- Estimated Production Time…… 6 to 8 Weeks

ACCEPTED this ____ day of _____, 2014

_____
Name of Purchaser

By: _____
Authorized Signature

_____
Title

SUBMITTED this 11th day of February, 2014

_____
Canyon Systems, Inc. Representative

By: _____
Authorized Signature

_____
Title

AERZEN USA
Corporation
108 Independence Way
Coatesville, PA 19320

www.aerzenusa.com

Ph/fax: (484) 288-6366/ (610) 380-0278 email: ebennett@aerzenusa.com 11-Feb-14

To: Nick Worley, P.E. **page 1 of 1** **From: Eric Bennett**
Frachetti Engineering **Aerzen Ref: E41-23074**
c/o: Mark Sampson of Water Control Corporation (303) 717-1879
Re: Erie, CO

TB150-1.0S

Weights & Dimensions:

Discharge connection	ANSI	10"
Motor cooling connection	ANSI	4"
Blower torso weight	lbs	1900
A/B Type Envelope dim.*	LxWxH in.	47X50X77

* non binding dimensions includes, discharge silencer, relief valve, check valve, and flex connector
3 ft space is required around the blower for service and maintenance.

Aerzen Turbo Blower package consists of the following components, completely assembled in our factory.

1 Aerzen Centrifugal Blower TB Series
1 bump air foil bearings
1 high speed PM motor
1 inverter
1 sound enclosure
1 PM motor cooling system
1 enclosure integrated air filtration system
1 Blow Off Valve
1 BOV silencer
1 pipe insulation
1 CPU
1 LCP (MICOM control, Touch Screen)
1 set of necessary sensors (temp and pressure)

Scope of Supply

1 compact blower package as listed above
1 passive harmonic filter (ships loose to be installed by others)
1 check valve (ships loose to be installed by others)
1 discharge silencer (ships loose to be installed by others)
1 set of spare enclosure filter elements
1 flanged flexible connector ANSI 150#, discharge
1 domestic packaging
1 freight to jobsite
1 trip, 2 days mfg onsite services (addl days $1,800/day)

TOTAL for 1 unit(s) c/o: **Mark Sampson of Water Control Corporation (303) 717-1879**

Pricing: FCA Coatesville, PA 19320, Freight allowed
Terms: This offer is subject to Aerzen Standard Terms and Conditions (A2-001-USA January 2009)
Submittals: 2-3 weeks after receipt of Purchase Order
Payment: 20% upon receipt of approved submittal, 75% upon shipment Net 30 and 5% retention not to exceed 120 days from shipment.
Delivery: presently approx. 4 months upon technical release by customer
Warranty: 24 months after start up or 30 months after delivery, which ever comes first*
*Maintenance must be performed per the Instruction Manual using Aerzen spare parts.
*Equipment not manufactured by Aerzen will carry the manufacturer's standard warranty

3 G TB150-1.0S

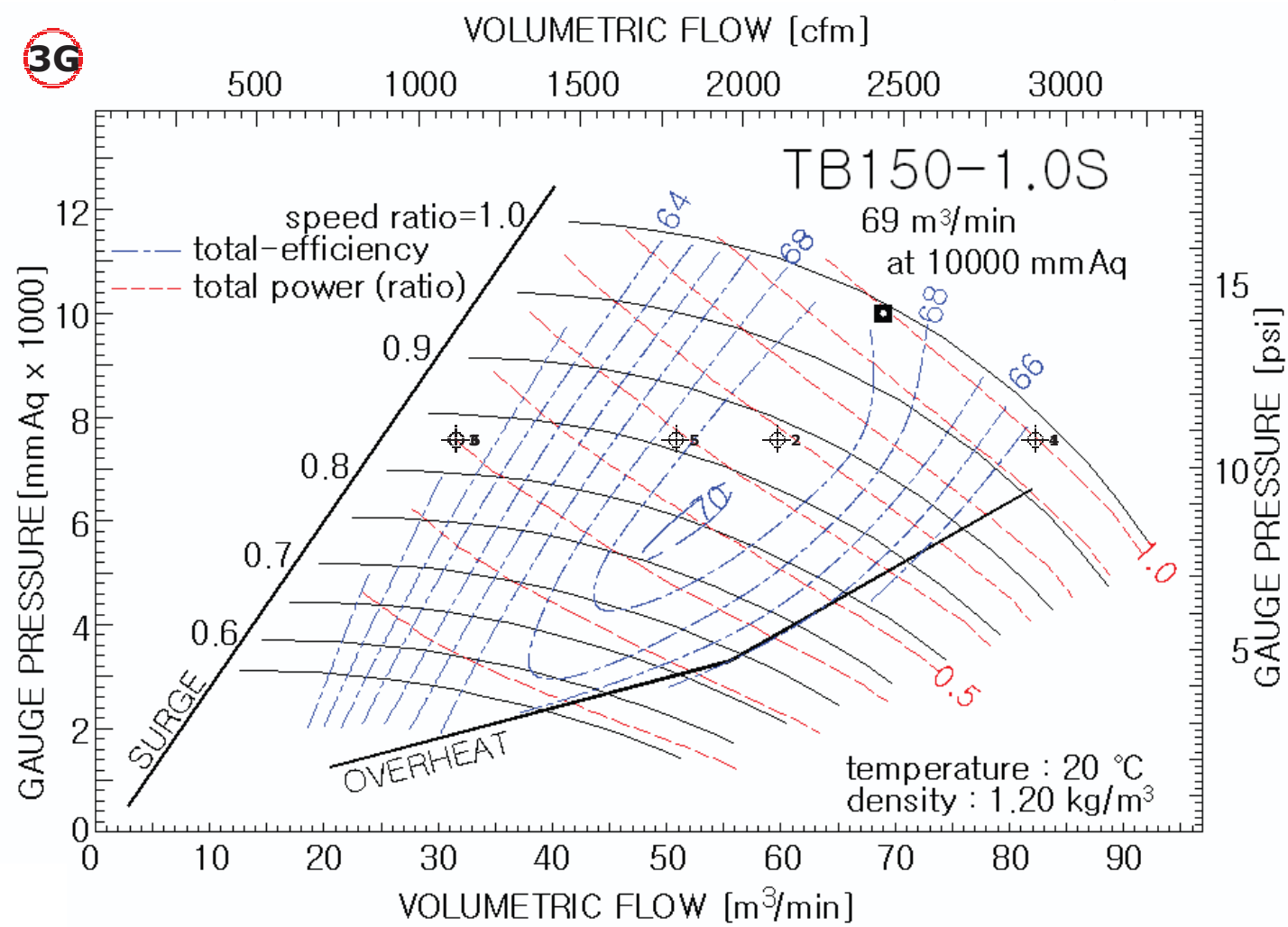

- TITLE: E41-23074
- UNIT SYSTEM: US (ft-lb)

* Typically 0%RH or 36%RH @ 68°F(20°C), 14.696psia(101.325kPa) for USA. 65%RH @ 20°C, 101.325kPa for Japan

STANDARD CONDITION				
T_{st} [°F]	$R.H_{st}$ [%]	P_{st} [psi(A)]	Altitude [ft]	Ambient Pressure [psi(A)]
68	36	14.696	4945	12.253

COMMENT

Save | Copy to my Account

* Built-in Filter : Fresh 0.03 psi / Dirty 0.22 psi

Pt	T_1 [°F]	R.H [%]	Q_{std} [CFM]	# of Units	$P_{2(G)}$ [psi(G)]	$\triangle P_{filter}$ [psi]		$Q_{in/unit}$ [CFM]	$Q_{act/unit}$ [CFM]	$Q_{corr/unit}$ [CFM]	Mass Flow [lbm/s]	P_{corr} [psi]	η_{total} [%]		Total Input [kW] Unit	Total	remark	Del
1	100	80	2,200	1	8.5	0.2	▶	2,959.01	3,008.11	2,920.84	2.887	10.608	64	▶	108.4	108.4	MAX SUMMER	X
2	100	80	1,600	1	8.5	0.2	▶	2,152	2,187.71	2,124.25	2.099	10.608	69	▶	73.1	73.1		X
3	100	80	850	1	8.5	0.2	▶	1,143.25	1,162.22	1,128.51	1.115	10.608	62	▶	43.2	43.2	MIN SUMMER	X
4	0	50	2,585	1	8.5	0.2	▶	2,680.83	2,725.32	2,919.95	3.260	10.608	64	▶	98.2	98.2	MAX WINTER	X
5	0	50	1,600	1	8.5	0.2	▶	1,659.32	1,686.85	1,807.32	2.018	10.608	68	▶	57.2	57.2		X
6	0	50	1,000	1	8.5	0.2	▶	1,037.07	1,054.28	1,129.57	1.261	10.608	62	▶	39.2	39.2	MIN WINTER	X

Nick Worley

From: Mark Sampson
Sent: Tuesday, March 18, 2014 8:29 AM
To: Nick Worley
Subject: Aerzen Blowers/Schwing Bioset for Erie
Attachments: E41-23074.TB100-1.0S Scope of Supply.pdf; E41-23074.TB100-1.0S Performance Data.pdf; E41-23074.Scope of Supply.pdf; E41-23074.TB150-1.0S Performance Data.pdf

Categories: Proposal

Hi Nick!

I hope this e-mail finds you happy and well.
Budget Price for the larger blower is $89,503.00 and for the smaller one, $70,708.00

Take a look at this and let me know if we made any mistakes or if you need further information, or if you have questions.

Regards,
Mark Samspon

From: Eric Bennett [mailto:ebennett@aerzenusa.com]
Sent: Monday, March 17, 2014 4:50 PM
To: Mark Sampson
Cc: Tom McCurdy; Joel Schomo
Subject: RE: Aerzen Blowers/Schwing Bioset for Erie

Mark,

Sorry for the delay, please find the attached. We originally sized the replacement blower on February 11th.

Best Regards,

Eric

Eric Bennett
484-288-6366

From: Nick Worley [mailto:nick@frachetti.com]
Sent: Tuesday, March 11, 2014 11:10 PM
To: Mark Sampson
Subject: Aerzen Blowers/Schwing Bioset for Erie

Mark, I have finally arrived at the blower size required for Erie to upgrade capacity. Please provide budget pricing for the following:

- One blower sized at 2200 SCFM at 8.6 psi (identical to existing)
- One blower sized at 1100 SCFM at 8.6 psi

I would also like to see pricing for a Schwing Bioset process for lime addition. Erie already has the lime infrastructure which may be used with a Schwing Bioset process. I would like to get the following information:

- Cost for a Bioset process (screw press, piston pump, reactor, standard drop pipe) for 520 lbs/hour throughput at 0.8% inlet sludge (WAS)
- Lime requirements per dry lb sludge

Nick Worley

From: Mark Sampson
Sent: Thursday, April 03, 2014 9:16 AM
To: Nick Worley
Subject: Town of Erie K Turbo Blowers

Nick,

Here is from Joel Schomo below. Nick, Joel worked for Kturbo and was hired by Aerzen when they bought the Kturbo line.
He is pretty familiar with both pieces of equipment. Let me know if you want to conference call with Joel, or, what is the next step?.....I don't know if we have a copy of that Erie Spec document.

Regards,
Mark

From: Joel Schomo [mailto:jschomo@aerzenusa.com]
Sent: Tuesday, April 01, 2014 10:58 AM
To: Mark Sampson; Tom McCurdy
Cc: Eric Bennett
Subject: RE: Town of Erie K Turbo Blowers

Hello Mark,

I shared the below description with Clark last year when the same questions came up;

It looks like this model was customized for the conditions at Erie and that a TB200 impeller/motor core is operating with a 150HP VFD. The intrinsic coupling of the PM motor and current control VFD can do this with the KTurbo design. The larger impeller was needed for the volumetric flow but because of the elevation and power needed it was suited with a 150HP VFD. So adjusting the limits of the blower would not be recommended. I feel the best solution would be to optimize the control sequence of the blowers to operate in idle mode allowing the blower to deliver/not deliver air as much as needed without any ill effects on the blower and bearing. Understanding capacity and min limits of the blower would be helpful in this evaluation. Maybe this data is logged and can be retrieved from the SCADA.

I believe this was done for commercially competitive reasons and to meet spec requirements. Aerzen is not in a position to provide the same 'customized' unit.

- Is the blower a TB-200 or TB-150?

  The unit is a customized TB150 unit

- At 7.1 psi, does the TB-150 have an output of 3000 SCFM during the winter? Or is this not possible for a TB-150?

  This is not possible for the TB150 to have the 3000 SCFM flow in the winter

- The screen shots I attached show 3000 CFM. Is this SCFM or ACFM? The 3000 cfm flow rate is at full blower output.

This is a ACFM.

Joel Schomo
610-563-5229

From: Mark Sampson [mailto:m.sampson@watercontrolcorp.com]
Sent: Friday, March 28, 2014 5:52 PM
To: Tom McCurdy; Joel Schomo
Subject: Fwd: Town of Erie K Turbo Blowers

Gentlemen
Can you offer me an answer for Nick,
Please
Thanks Much
Mark

Sent from my iPhone

Begin forwarded message:

> **From:** Nick Worley <nick@frachetti.com>
> **Date:** March 28, 2014 at 3:46:25 PM MDT
> **To:** Mark Sampson <m.sampson@watercontrolcorp.com>
> **Subject: RE: Town of Erie K Turbo Blowers**
>
> Mark, I am still trying to figure out what the Erie blowers are capable of. I attached the performance data that Aerzen produced back in February that should match what they have on site. However, the attached blower screen shot shows the blower is a TB200-1.0 and is currently operating at 2997 cfm(SCFM or ACFM I don't know) and 7.1 psi. The nameplate data is also attached and it shows the unit is a TB150-1.0. I also attached an hour by hour log which shows the blower ranges from 1800-3000 CFM at a constant 7.1 psi pressure. Please ask Aerzen to provide answers to the following:
>
> - Is the blower a TB-200 or TB-150?
> - At 7.1 psi, does the TB-150 have an output of 3000 SCFM during the winter? Or is this not possible for a TB-150?
> - The screen shots I attached show 3000 CFM. Is this SCFM or ACFM? The 3000 cfm flow rate is at full blower output.
>
> Thanks for your help.
> Nick

> **From:** Mark Sampson [mailto:m.sampson@watercontrolcorp.com]
> **Sent:** Tuesday, February 11, 2014 10:08 AM
> **To:** Nick Worley
> **Subject:** Town of Erie K Turbo Blowers
>
> Hi Nick,
>
> How things today?
>
> See the information requested above and let me know what I can do to further help you on this job. Nick, Eric has comments below related to your "red line" of the previous Kturbo curve.

350 SMC Drive
Somerset WI 54025
Phone: (715) 247-3433
Fax: (715) 247-3438

March 24, 2018

Frachetti Engineering
5325 S Valentia Way
Greenwood Village, CO 80111

Attention: Nick Worley, PE
Reference: Bioset™ Process – Class A/EQ Biosolids Stabilization System
Schwing Bioset, Inc. Quotation No. 2014087

Dear Mr. Worley,

Schwing Bioset, Inc. is pleased to propose the following as our budgetary scope of supply for the above referenced project:

BIOSOLIDS PROCESSING SUMMARY

Process Material Description:	WAS
Process Material Solids Content:	0.8 wt% Total Dry Solids
Design Processing Rate:	520 dry pounds / hour
Estimated Polymer Consumption:	24 – 30 # per dry ton
Design Biosolids Dryness from Screw Press:	20 - 25 % solids
Estimated Lime Feed Rate:	303 lb/hour (12% of wet sludge cake mass)
Estimated Sulfamic Acid Feed Rate:	2 lb/hour (0.1% of wet sludge cake mass)
Pump Flowrate (includes added chemicals):	2900 wet-lb/hour (approx. 5.6 GPM)

Note: Equipment size based on 520 dry pounds / hour WAS @ 0.8 % solids, with 8 hours/day operation.

BIOSET EQUIPMENT SUMMARY

A. Dewatering Screw Press – Dewatering screw press system complete with polymer system, reaction tank and mixer, and sludge feed pump.

B. Lime Feed System – Provides storage and accurate metering of quicklime (calcium oxide) into the Twin-Screw Mixer inlet hopper. Includes metering screw conveyor to convey from existing silo to Bioset mixer.
C. Sulfamic Acid Feeder – Provides storage and accurate metering of sulfamic acid into the Twin-Screw Mixer inlet hopper.
D. Collection Screw Conveyor- The Collection Screw Conveyor collects dewatered sludge from the screw press, and conveys the sludge to the Twin-Screw Mixer.
E. Twin-Screw Mixer – The Twin-Screw Mixer allows for the blending of the sludge, lime, and acid into a homogenous mixture. It also helps feed this mixture into the Reactor Feed Pump.
F. Reactor Feed Pump – The Reactor Feed pump moves the sludge/lime/acid mixture through the Reactor Vessel.
G. Hydraulic Power Unit – The Hydraulic Power Unit drives the Reactor Feed Pump.
H. Reactor Vessel – The insulated plug-flow reactor is used to achieve the required time and temperature to meet EPA regulations for Class A/EQ biosolids.
I. Ammonia Scrubber – Captures and treats ammonia emissions at the reactor discharge outlet.
J. Bioset Process Control Panel – Used to operate and monitor all Bioset System equipment and instrumentation.
K. Testing Kit – Portable instrument is provided to measure the pH and temperature of material generated by the Bioset System.

A. DEWATERING - SCREW PRESS

Quantity:	One (1)
Model:	FSP 08 HP LL
Press Length:	21 feet 3 inches
Press Width:	4 feet 5 inches
Press Height:	6 feet 1 inches
Screw Speed:	0.4 to 1.7 RPM
Design Process Capacity:	520 Dry lb/hr
Press HP:	5.4 HP
Reaction Tank Mixer HP:	1.5 HP
Weight est.:	12500 lbs

Scope includes:

1. Projected Sludge Volumes:
   - WAS produced at 0.8 % total solids
   - Schedule: 8 hours / day
   - Estimated flow to Screw press: 130 gpm
2. The SBI Screw Press system is designed for continuous dewatering of flocculated slurry. The system consists of a Screw Press dewatering unit, reaction tank with mixer, polymer system, sludge feed pump and controls.
3. The Screw Press dewatering unit compresses and dewaters flocculated slurry using a screw rotating at very slow speed in a perforated screen. Observation windows and flaps allow a direct view of the dewatering process. The simple operating principle is achieved with only a

few functional component groups. Slow movement and the high quality design of the structural components guarantee a high service life.

4. Effective flocculation is achieved in a mixing reaction tank that is part of the Screw Press. It is a closed design with observation windows for viewing of the current flocculation quality. Special designed paddle and flow breakers for effective mixing and gentle transport of the flocks. Reaction tank includes mixer with VFD compatible motor. Reaction tank includes pressure sensor to control sludge feed pump speed.
5. Press dewatering system is powered using a Premium efficient, TEFC motor. Variation of the Screw speed is achieved with a VFD.
6. The system will continuously discharge cake from the press into a discharge channel. The filtrate discharge will discharge from a drip tray below the perforated screen into a separate discharge channel. Drying is controlled by pneumatic pressure on discharge cone, solenoid valve for cone pressure is included on press.
7. To maintain operating efficiency the back washing cycle cleans the screens intermittently (generally less than 5 minutes/day). Dewatering operations are not suspended during washing cycle. Wash system includes solenoid valve to control wash water and compressed air to actuate cleaning ring.
8. Includes positive displacement progressive cavity slurry feed pump to feed 130 gpm 0.8 % sludge. Motor horsepower 10 HP.
9. Packaged polymer dilution skid provided to activate and blend neat polymer with dilution water. Polymer skid includes rotameters, mixer, polymer feed pump (progressive cavity type), and solenoid valve for water. Polymer skid includes control panel for polymer system alarms and speed control.
10. Polymer and sludge is blended in an agitated reaction tank to flocculate the solids. A pressure transducer on the reaction tank controls sludge feed pump speed.
11. Magnetic flow meter provided between sludge feed pump and reaction tank to measure sludge flow rate.
12. Air compressor is provided to energize the back pressure cone on the screw press and to actuate the wash ring motion.
13. Local control panel provided, dedicated to screw press dewatering system. Control panel will have Allen Bradley Compactlogix PLC.
14. VFDs for screw press equipment will have NEMA 4 enclosures and will be mounted separate from the panel and will be located near the driven equipment.
15. Interconnecting piping and wiring between the SBI components to be provided by the installing contractor.

B. LIME FEED SYSTEM

Schwing Bioset proposes to use existing lime silo at facility. Inspection of silo is needed, silo should include bin activator, dust collector, level sensor, and fill controls as minimum.

Scope includes:

1. A variable speed screw conveyor shall be furnished to convey material from the Lime Silo to the Twin-Screw Mixer feed hopper. The Lime Screw Conveyor shall be CEMA standard design.

C. SULFAMIC ACID FEEDER

Quantity:	One (1)

Scope includes:

1. A variable speed chemical feeder shall be furnished to discharge dry sulfamic acid into the Twin-Screw Mixer feed hopper, motor shall be TEFC.
2. A stainless steel feed hopper shall be furnished with storage capacity for approximately 100 lbs of dry sulfamic acid.
3. A platform and support legs shall be provided to elevate the Sulfamic Acid Feeder into position next to the Twin-Screw Mixer feed hopper.

D. COLLECTION SCREW CONVEYOR

Quantity:	One (1)
Material of Construction:	A36 Carbon Steel
Auger Diameter:	12”
Length:	Approx. 10’
Motor HP:	3

A Collection Screw Conveyor shall be included to collect the dewatered sludge from the screw press and feed to the Twin-Screw Mixer unit. The Collection Conveyor shall include carbon steel trough and carbon steel flights with covers and hopper to receive sludge from screw press.

E. TWIN-SCREW MIXER

Quantity:	One (1)
Model:	SD 250
Material of Construction:	A36 Carbon Steel
Auger Diameter:	9.8”
Inlet Opening Size:	Approx. 60” x 17”

Scope includes:

1. The Twin-Screw Mixer shall mix biosolids, lime, and acid into a homogenous mixture and feed that mixture into the Reactor Feed Pump. The augers shall be intermeshing and counter-rotating, with a combination of paddle flights and full flights.
2. The Twin-Screw Mixer shall be furnished with hanger bearings to support the ends of the screw auger shafts. An autogreaser shall be factory mounted at the Twin-Screw Mixer to provide lubrication for the hanger bearings.
3. The Twin-Screw Mixer shall be equipped with a three-position actuating lever to control the screw augers (FORWARD / STOP / REVERSE).
4. A pressure sensor shall be mounted at the transition section between the Twin-Screw Mixer and Reactor Feed Pump.

- Field wiring to the Bioset Process Control Panel shall be completed by others.

5. An A36 carbon steel Feed Hopper shall be supplied with the Twin-Screw Mixer. The Hopper shall be approximately 5' in height (above the Twin-Screw Mixer inlet flange). Flanged inlet for sludge feed, lime feed, and acid feed shall be provided. Flanges of the Hopper and Twin-Screw Mixer shall bolt together.
6. A radar type level sensor shall be included with the Feed Hopper, mounted over the Twin-Screw Mixer inlet opening. Field wiring to the Bioset Process Control Panel shall be completed by others.
7. The Twin-Screw Mixer unit will be supplied with a 7.5 HP, 480 V, 3 phase, 60 Hz, TEFC drive motor and VFD to adjust the operating speed of the Twin-Screw Mixer unit.

F. REACTOR FEED PUMP

Quantity:	One (1)
Model:	KSP 10R
Design Flowrate:	5.6 GPM
Diameter of Pumping Cylinder:	5.9 inches [150 mm]
Hydraulic Cylinder Diameter:	3.5 inches [90 mm]
Cylinder Ratio:	2.78
Cylinder Stroke Length:	19.7 inches [500 mm]

Scope includes:

1. The Reactor Feed Pump shall be a hydraulically driven, twin-cylinder, reciprocating piston pump equipped with Rock valve.
2. The Reactor Feed Pump shall be equipped with a single discharge outlet. An adapter to the pipeline shall be furnished at the discharge outlet, and shall consist of a quick-connect coupling, 4" spool piece, 2" pressure bleed valve, and 4" ANSI 150# flange.
3. One (1) plug valve shall be supplied in this pipeline to isolate the Reactor Feed Pump for maintenance.
4. The Reactor Feed Pump water box shall have 1" connections for water supply and overflow and 1½" for drain line. Water lines and valves shall be supplied by installing contractor.
5. Maintenance Mode Controls shall be factory mounted at the Reactor Feed Pump. Maintenance Mode Controls include a MAINTENANCE MODE ON / OFF switch, FORWARD / OFF / REVERSE switch, PUMP JOG pushbutton, and EMERGENCY STOP pushbutton. Field wiring to the Bioset Process Control Panel shall be completed by installing contractor.

G. REACTOR FEED PUMP HYDRAULIC POWER UNIT

Quantity:	One (1)
Model:	110L-10HP
Reservoir Size:	30 Gal.
Motor Size:	10 HP, 480V / 3∅ / 60Hz
Hydraulic Pump (Reactor Feed Pump):	Rexroth A11VO40

Scope includes:

1. The structural frame and oil reservoir shall be fabricated from A36 carbon steel.
2. Rexroth variable displacement axial piston pump shall be supplied to drive the hydraulic circuit for the Reactor Feed Pump.
3. The Power Unit shall include an initial fill of oil, pressure gauge, pressure switch, relief valve, clean-out cover, 10-micron return line oil filter, and combination temperature and sight gauge.
4. A premium efficient, TEFC motor shall be supplied.
5. A junction box shall be factory mounted on the Power Unit.
    - The junction box enclosure shall be NEMA 4X, 304 stainless steel.
    - An EMERGENCY STOP pushbutton and circuit breaker disconnect switch shall be mounted on the front of the enclosure.
    - Field wiring to the Bioset Process Control Panel shall be completed by the Installing Contractor.

H. REACTOR VESSEL

Quantity:	One (1)
Material of construction:	A36 carbon steel
Diameter:	36”
Length:	13.5’ (excluding the tapered ends)
Design Residence Time:	60 minutes

Scope includes:

1. Previously operating under the time/temperature formula of option 1B of the 503 rule for pathogen destruction (70C/30minutes), on August 16, 2011 the Bioset process was accepted as a PFRP process and can now operate at 55C for 40 minutes. The reactor is designed for 60 minutes retention time for a 50% safety factor (safety factor of 1.5).
2. The Reactor Vessel shall be constructed from welded A36 carbon steel pipe. The Reactor Vessel shape shall be cylindrical with tapered ends, designed to facilitate plug-flow of material.
3. Insulation shall be 2” thick with stainless jacketing. Insulating services for the Reactor Vessel shall be provided by Schwing Bioset.
4. One (1) pressure sensor shall be furnished at the Reactor Vessel inlet.
5. Four (4) temperature sensors shall be installed along the length of the Reactor Vessel. Output shall be displayed locally and at the Bioset Process Control Panel.
6. The Reactor Vessel shall include a self-supporting discharge assembly for truck loading. The discharge assembly shall consist of a vertical riser and a horizontal arm terminating in the discharge outlet.
7. A collection hood shall be furnished at the discharge outlet to collect vapor for the Ammonia Scrubber. The hood shall be furnished with a neoprene chute, pinch-type check valve, and 6” connection to the Ammonia Scrubber suction piping.

I. AMMONIA SCRUBBER

Quantity:	One (1)

Scope includes:

1. Ammonia and water vapor at the Reactor Vessel discharge outlet shall be captured by a wet scrubber.
2. The scrubber shall be of fiberglass, corrosion-resistant construction.
3. A 500 CFM blower shall maintain negative pressure at the vapor collection hood, TEFC motor.
4. Scrubber return lines which will be outdoors will be insulated to prevent freezing.

J. BIOSET PROCESS CONTROL PANEL

Quantity:	One (1)

Scope includes:

1. The Bioset Process Control Panel enclosure shall be NEMA 4X, 304 stainless steel, furnished with mounting stand.
2. External power supply shall be 480V / 3∅ / 60Hz. A circuit breaker disconnect switch shall be provided at the front of the panel.
3. Allen Bradley CompactLogix 1500 PLC shall be used to control all panel functions.
4. Allen Bradley PanelView Plus touch-screen interface shall be used for all operator input, status monitoring, local controls, and alarm notification.
5. The following shall be monitored using the touchscreen interface:
    - HOPPER LEVEL SENSOR. Monitors the height of sludge/lime/acid mixture in the Twin-Screw Mixer hopper.
    - TRANSITION PRESSURE SENSOR. Measures material pressure at the transition between the Twin-Screw Mixer and Reactor Feed Pump.
    - REACTOR PRESSURE SENSOR. Measures material pressure at the Reactor Vessel inlet.
    - REACTOR TEMPERATURE SENSORS. Measures the temperature profile of the sludge/lime/acid mixture as it moves through the Reactor Vessel.
6. The following shall be controlled/adjusted/monitored using the touchscreen interface:
    - LIME FEED RATE INTO THE TWIN-SCREW MIXER HOPPER. In Automatic Mode, the lime feed rate shall be adjusted as a fixed percentage of the sludge cake feed rate, based on Reactor Vessel temperature measurements.
    - SULFAMIC ACID FEED RATE INTO THE TWIN-SCREW MIXER HOPPER. In Automatic Mode, sulfamic acid feed rate shall be a fixed percentage of the lime feed rate.
    - AUGER SPEED FOR THE TWIN-SCREW MIXER. In Automatic Mode, the screw auger speed shall be adjusted based on pressure measured at the transition between the Twin-Screw Mixer and Reactor Feed Pump.

- PUMPING RATE FOR THE REACTOR FEED PUMP. In Automatic Mode, the pumping rate shall be adjusted based on fill level in the Twin-Screw Mixer Hopper.
- OPERATION OF THE AMMONIA SCRUBBER. In Automatic Mode, the Ammonia Scrubber shall run whenever the Reactor Feed Pump is in operation.
- Operation of the Collection Screw Conveyor. The conveyor will run at a constant speed to convey dewatered biosolids to the twin screw mixer.

7. A POWER ON/OFF indicator light, EMERGENCY STOP pushbutton, ALARM indicator light, and ALARM RESET pushbutton shall be provided at the front of the panel.
8. Full-voltage motor starters for the following equipment shall be furnished by Schwing Bioset:
   - Sludge Transfer Screw
   - Scrubber Fan
9. Variable frequency drives for the following equipment shall be furnished by Schwing Bioset and factory-mounted in the Bioset Process Control Panel:
   - Lime Screw Conveyor.
   - Sulfamic Acid Conveyor.
   - Twin-Screw mixer unit.
   - Reactor Feed Pump
10. Schwing Bioset standard input and output devices will be provided.

K. TESTING KIT

Quantity:	One (1)
Model:	Oakton pH Meter 110

Scope includes:

1. A portable pH meter shall be provided to measure the pH and temperature of treated Biosolids discharged from the Reactor Vessel.

SPECIAL TOOLS

One (1) set of Schwing Bioset standard tools is included.

SPARE PARTS

Spare Set of replacement lobes for reactor feed pump.

FIELD SERVICE

Schwing Bioset shall provide a trained service technician to supervise system installation, assist start-up, and / or to train the owner's personnel in the operation and maintenance of the Schwing Bioset supplied equipment.

The service technician shall be made available for Sixteen (16) days over Four (4) trips.

If required, additional service may be purchased at the prevailing rates at the time service is performed. Current service rates are as follows:

- US $115.00 per hour – standard eight (8) hour day.
- US $172.50 per hour – overtime (over and above the standard eight (8) hour day.)
- US $230.00 per hour – Sundays and holidays.
- Travel and per diem (i.e., hotel, food, car) expenses at cost + 15%

SCOPE OF SUPPLY SUMMARY

A. FSP 08HPLL Dewatering Screw Press	One (1)
B. Lime Feed Screw:	One (1)
C. Sulfamic Acid Feeder:	One (1)
D. Collection Screw Conveyor:	One (1)
E. Twin-Screw Mixer:	One (1)
F. Reactor Feed Pump:	One (1)
G. Hydraulic Power Unit:	One (1)
H. Reactor Vessel:	One (1)
I. Ammonia Scrubber:	One (1)
J. Control Panel - Bioset Process:	One (1)
K. Testing Kit:	One (1)
Spare Parts:	One (1) lot
Special Tools:	One (1) lot
Field Service:	Sixteen (16) days, Four (4) trips

Total price for the above listed scope of supply..... **$ 804,800.00**

All prices are quoted:
F.O.B. Factory
Full Freight Allowed to jobsite
Price is valid for 60 days
Price is in US dollars.

INSTALLATION AND OPERATION ESTIMATE

The following estimated values may be used to assist in evaluating the installation and operating costs of the Schwing Bioset Alkaline Stabilization System. The values presented are nominal only, and adjustment as necessary must be considered to suit unique site conditions and operating requirements.

Building Requirements: Screw Press, Lime Feeder, Mixer, Pump, Reactor, and ancillary equipment need a footprint of 1800 square feet.

Installation: Installation of the mechanical equipment may be estimated as 320 man-hours. Electrical and Instrumentation installation may be estimated as 320 hours for that trade. Installation may be completed with typical tools, along with rigging equipment capable of 8 ton capacity.

Operating Personnel: The equipment does not require more than 1 attendant during operation. Typically the attendant will be able to monitor the dewatering and alkaline stabilization equipment simultaneously.

Maintenance Costs: Owners should expect downtime of 10 days or less per year for maintenance activities.

Estimated Operating cost of Screw Press is $ 46 / dry ton, estimate operating cost of Class A Bioset process is $ 102 / dry ton. Operating cost is for consumables and utilities, it does not include labor or spare parts. Operating costs will vary with market price of commodities such as dewatering polymer and quicklime.

TAXES:

No taxes are included in this quote. The amount of any applicable present or future state/local sales/use tax or other government charge upon the production, sale, shipment, and/or use of the goods covered by this quotation shall be added to the invoice where appropriate.

TERMS:

10% with order
20% with submittal approval
65% when equipment is ready to ship
5% with acceptance not to exceed 90 days from shipment.

Payment terms offered are subject to final credit approval.

SUBMITTALS:

Eight (8) to ten (10) weeks after receipt of approved order. Four (4) copies shall be provided.

DELIVERY:

Equipment shall be delivered twenty (20) to twenty-four (24) weeks after submittals are approved.

OPERATION & MAINTENANCE MANUALS:

Two (2) final hard copies and two (2) electronic copies on CD-ROM shall be furnished with the equipment. O&M Manuals will be delivered four (4) weeks after equipment delivery.

WARRANTY

Schwing Bioset, Inc. warrants its new equipment against defects in material and workmanship under normal use and service, and which shall not have been subject to misuse, negligence or accident, for a period of 1 year to commence upon startup or 90 days from delivery, whichever comes first.

Schwing Bioset, Inc. will replace or repair free of charge, FOB job-site, such part or parts thereof as in its sole judgment shall be deemed defective.

This warranty shall not apply to any equipment manufactured by us which shall have been loaded or operated beyond its rated capacity as specified by Schwing Bioset, Inc.. Damage resulting from improper installations or alterations outside our plant will be considered as misuse and not as a defect. Certain parts of the equipment provided by Schwing such as the pumping cylinders, valves, pumping rams, screw flights, sliding frame components, trough liners for screws etc. in contact with material, are subject to normal wear. This normal wear is not covered under this warranty. Schwing Bioset, Inc. shall not be liable for consequential damages or injuries of any kind, or for expenses, losses or delays incidental to any failure. Schwing Bioset, Inc. reserves the right to make changes and improvements in its product without incurring any obligations to install any such changes or improvements in its products previously manufactured.

This warranty is in lieu of any other warranty expressed or implied or any other obligation or liability on the part of Schwing Bioset, Inc., and no other person is authorized to make any representations or warranties beyond those herein expressed.

Without limiting the generalities of the foregoing, THERE IS NO IMPLIED WARRANTY OF MARKETABILITY AND NO IMPLIED WARRANTY OF FITNESS FOR A PARTICULAR PURPOSE.

EQUIPMENT AND SERVICES TO BE PROVIDED BY OTHERS

1. Installation, offloading, field assembly, and erection of the Schwing Bioset, Inc. (SBI) supplied equipment.
2. Storage of equipment and/or costs for long term storage (longer than 3 months).
3. Racks, trays or supports for hydraulic lines, sludge lines, or control wiring.
4. Miscellaneous metal.
5. Field painting of any of the SBI supplied equipment. All touch up painting required due to normal wear and tear during shipping shall the responsibility of others.

6. Field-routed grease tubing
7. Supports for grease tubing, conduit or control wiring.
8. Field wiring of any kind.
9. Labor and material for preliminary, final field, system performance and system integrity tests.
10. Anchor bolts, nuts, and washers for the SBI supplied equipment.
11. Cost for Engineer, Owner, or Contractor to witness any shop test.
12. Additional costs to supply alternate products other than specifically mentioned in this scope.
13. Electronic O&M manuals.
14. Networking, hardware, communication modules, or power supplies not specifically mentioned in this scope.
15. PLC programming software or software licenses not specifically mentioned in this scope.
16. It is the contractor's responsibility to field verify building dimensions, equipment access and that equipment layout /dimensions are suitable to accommodate the Schwing Bioset supplied equipment.
17. Field service technicians or special tools not specifically mentioned in this scope.
18. Water and drain piping of any kind.
19. Motor starters or variable frequency drives not specifically mentioned in this scope.
20. After equipment is delivered to site, disposal of any hydraulic oil shall be by others.
21. Spare parts not specifically mentioned in this scope.

If you have any questions, please don't hesitate to contact me by mobile 612-867-4429, or email jdivalentino@Schwingbioset.com.

Yours very truly,
Schwing Bioset, Inc.

Joshua R. Di Valentino
Western Regional Sales Manager

cc: Mark Sampson – Water Control Corp.

Frachetti Engineering

Erie North, CO

3/18/2014

AnoxKaldnes™ IFAS

Kruger Project No.: 5700106402

Submitted to:

Nick Worley, P.E.
Franchetti Engineering
5325 S Valentia Way
Greenwood Village, CO 80111

Submitted by:

Brad Mrdjenovich
AnoxKaldnes Applications Engineer
I Kruger Inc.
4001 Weston Parkway
Cary, NC 27513

This document is confidential and contains proprietary information.
It is not to be disclosed to a third party without the written consent of Veolia Water Solutions & Technologies

Introduction

I Kruger Inc is pleased to present this budgetary proposal for our AnoxKaldnes IFAS System. For this application, Kruger proposes upgrading the existing IFAS system. This upgrade would include moving all of the existing K3 media into IFAS Zone #1 as well as adding additional K3 media to those reactors. The cylindrical screens in IFAS Zone #2 would also be moved to IFAS zone #1.

Please note that modifications to the existing medium bubble air grids as well as additional modifications to the screens may also be required.

We appreciate the opportunity to provide this proposal to you. If you have any questions or need further information, please contact our local Representative, Brian Dieke of the Water Technology Group, or our AnoxKaldnes Product Manager, Chris Thomson, at (919)-653-4562 (chris.thomson@veolia.com).

cc: CT, DOF, project file (Kruger)
Brian Dieke (Water Technology Group)

Revision	Date	Process Eng.	Comments
0	03/11/2014	DOF, JH	Initial, budgetary proposal.

AnoxKaldnes IFAS System Configuration

For this application, Kruger proposes upgrading the existing IFAS system. This upgrade would include moving all of the existing K3 media into IFAS Zone #1 as well as adding additional K3 media to those reactors. The cylindrical screens in IFAS Zone #2 would also be moved to IFAS zone #1.

Design Summary

The proposed design is based on the following influent wastewater characteristics and incorporating peak flow conditions for screen design purposes only. The design assumes that the raw influent wastewater is biodegradable, no toxic compounds are present, sufficient alkalinity is available to avoid pH depressions, that the COD/BOD ratio is between 1.7 and 2.3, and that none of the equipment provided would be used in a classified area (e.g. Class 1, Division 1 or Class 1, Division 2).

Facilities with primary clarification will require screening with a maximum of 6 mm (1/4 inch) openings for removal of particulate matter (rags, debris, etc.) prior to entering the AnoxKaldnes IFAS treatment reactors. Facilities that lack primary clarification will require screening with a maximum of 3 mm (1/8 inch) openings.

Table 1: Influent Design Basis

Parameter	Units	Short-Term Improvements	Long-Term Improvements
Flow, Max. Month	MGD	1.99	2.5
Flow, Peak Hour	MGD	8.70*	8.70*
BOD, Max. Month	lb/d	5,365	6,788
TSS, Max. Month	lb/d	6,557	8,296
NH_3-N, Max. Month	lb/d	596	754
TP, Max. Month	lb/d	232*	292*
Elevation	ft	4,940	4,940
Min./Max. Temperature	°C	15/22*	15/22*

*Assumed values.

Table 2: Effluent Objectives

Parameter	Units	Values
TIN	mg/L	10
TP	mg/L	1*

*Chemical trimming may be required to meet this objective.

Table 3: Short-Term Improvements Process Design Summary

Parameter	Units	Values
Number of Process Trains	-	2
Number of Anaerobic Zones per Train	-	2
Number of Pre-Anoxic Zones per Train	-	2
Number of Aerobic IFAS Zones per Train	-	1
Number of Aerobic Nitrification Zones per Train	-	1
Anaerobic Zone #1		
Dimensions	ft	38.92 L × 8 W × 18 SWD
Volume (Each)	ft^3	5,604
Total Volume (All Reactors, All Trains)	ft^3	11,208
Number of Mixers Per Reactor	-	1
Total Number of Mixers (All Reactors, All Trains)	-	2
Anaerobic Zone #2		
Dimensions (Each)	ft	38.92 L × 8.5 W × 18 SWD
Volume (Each)	ft^3	5,954
Total Volume (All Reactors, All Trains)	ft^3	11,909
Number of Mixers Per Reactor	-	1
Total Number of Mixers (All Reactors, All Trains)	-	2
Pre-Anoxic Zone #1		
Dimensions (Each)	ft	38.92 L × 10.5 W × 18 SWD
Volume (Each)	ft^3	7,355
Total Volume (All Reactors, All Trains)	ft^3	14,711
Number of Mixers Per Reactor	-	1
Total Number of Mixers (All Reactors, All Trains)	-	2
Pre-Anoxic Zone #2		
Dimensions (Each)	ft	38.92 L × 10 W × 18 SWD
Volume (Each)	ft^3	7,005
Total Volume (All Reactors, All Trains)	ft^3	14,010
Number of Mixers Per Reactor	-	1

Parameter	Units	Values
Total Number of Mixers (All Reactors, All Trains)	-	2
IFAS Zone		
Dimensions (Each)	ft	38.92 L × 34.25 W × 18 SWD
Volume (Each)	ft^3	23,992
Total Volume (All Reactors, All Trains)	ft^3	47,984
Media Type:	-	K3
Fill of Biofilm Carriers	%	65
Existing Media Volume (K3)	ft^3	17,905
Additional Media Volume (K3)	ft^3	13,309
Total Media Volume (All Reactors, All Trains)	ft^3	31,214
Aeration System Type	-	Medium Bubble
Total Process Air Requirement (All Reactors, All Trains)	SCFM	3,759
Total Mixing Air Requirement (All Reactors, All Trains)	SCFM	1,066
Discharge Pressure (From Top of Drop Pipe)	psi	8.6
Aerobic Nitrification Zone		
Dimensions (Each)	ft	38.92 L × 34.25 W × 18 SWD
Volume (Each)	ft^3	23,992
Total Volume (All Reactors, All Trains)	ft^3	47,984
Aeration System Type	-	Medium Bubble
Total Process Air Requirement (All Reactors, All Trains)	SCFM	629
Total Mixing Air Requirement (All Reactors, All Trains)	SCFM	400
Discharge Pressure (From Top of Drop Pipe)	psi	8.6
MLSS, Max. Month	mg/L	2,500
IMLR, Max. Month	%	400
RAS, Max. Month	%	50-100
Sludge Production, Max. Month	lb/day	4,900

Table 4: Long-Term Improvements Process Design Summary

Parameter	Units	Values
Number of Process Trains	-	2
Number of Anaerobic Zones per Train	-	2
Number of Pre-Anoxic Zones per Train	-	2
Number of Aerobic IFAS Zones per Train	-	1
Number of Aerobic Nitrification Zones per Train	-	1
Anaerobic Zone #1		
Dimensions	ft	38.92 L × 8 W × 18 SWD
Volume (Each)	ft^3	5,604
Total Volume (All Reactors, All Trains)	ft^3	11,208
Number of Mixers Per Reactor	-	1
Total Number of Mixers (All Reactors, All Trains)	-	2
Anaerobic Zone #2		
Dimensions (Each)	ft	38.92 L × 8.5 W × 18 SWD
Volume (Each)	ft^3	5,954
Total Volume (All Reactors, All Trains)	ft^3	11,909
Number of Mixers Per Reactor	-	1
Total Number of Mixers (All Reactors, All Trains)	-	2
Pre-Anoxic Zone #1		
Dimensions (Each)	ft	38.92 L × 10.5 W × 18 SWD
Volume (Each)	ft^3	7,355
Total Volume (All Reactors, All Trains)	ft^3	14,711
Number of Mixers Per Reactor	-	1
Total Number of Mixers (All Reactors, All Trains)	-	2
Pre-Anoxic Zone #2		
Dimensions (Each)	ft	38.92 L × 10 W × 18 SWD
Volume (Each)	ft^3	7,005
Total Volume (All Reactors, All Trains)	ft^3	14,010
Number of Mixers Per Reactor	-	1

Parameter	Units	Values
Total Number of Mixers (All Reactors, All Trains)	-	2
IFAS Zone		
Dimensions (Each)	ft	38.92 L × 34.25 W × 18 SWD
Volume (Each)	ft^3	23,992
Total Volume (All Reactors, All Trains)	ft^3	47,984
Media Type:	-	K3
Fill of Biofilm Carriers	%	65
Existing Media Volume (K3)	ft^3	17,905
Additional Media Volume (K3)	ft^3	13,309
Total Media Volume (All Reactors, All Trains)	ft^3	31,214
Aeration System Type	-	Medium Bubble
Total Process Air Requirement (All Reactors, All Trains)	SCFM	4,627
Total Mixing Air Requirement (All Reactors, All Trains)	SCFM	1,066
Discharge Pressure (From Top of Drop Pipe)	psi	8.6
Aerobic Nitrification Zone		
Dimensions (Each)	ft	38.92 L × 34.25 W × 18 SWD
Volume (Each)	ft^3	23,992
Total Volume (All Reactors, All Trains)	ft^3	47,984
Aeration System Type	-	Medium Bubble
Total Process Air Requirement (All Reactors, All Trains)	SCFM	876
Total Mixing Air Requirement (All Reactors, All Trains)	SCFM	400
Discharge Pressure (From Top of Drop Pipe)	psi	8.6
MLSS, Max. Month	mg/L	3,500
IMLR, Max. Month	%	400
RAS, Max. Month	%	50-100
Sludge Production, Max. Month	lb/day	6,225

Scope of Supply

Kruger is pleased to present our scope of supply which includes process engineering design, equipment procurement, and field services required for the proposed treatment system, as related to the equipment specified. The work will be performed to Kruger's high standards under the direction of a Project Manager. All matters related to the design, installation, or performance of the system shall be communicated through the Kruger representative giving the Engineer and Owner ready access to Kruger's extensive capabilities.

Process and Design Engineering

Kruger will provide process engineering and design support for the system as follows:

- Process Engineering consisting of aeration system sizing and configuration, sieve and outlet design.
- Review and approval of P&I Diagram for the AnoxKaldnes IFAS portion of the process. Preliminary General Arrangement Drawings and review and approval of final General Arrangement Drawings for the process. Review of reactor drawings with respect to penetrations and dimensions, excluding structural design.
- Equipment installation instructions for all equipment supplied by Kruger.

Field Services

Kruger will furnish a Service Engineer to perform the following tasks:

- Inspect installation of key pieces of equipment during construction.
- Inspect the completed system prior to startup.
- Assist the Contractor with initial startup of the system.
- Train the Owner’s staff in the proper operation and maintenance of the AnoxKaldnes IFAS system.
- Test and start any Kruger-supplied control equipment, including PLC programming and SCADA systems.

AnoxKaldnes IFAS System Equipment – Limited to In-Basin Equipment Only

Process and Mechanical Equipment Items	Qty	Description
AnoxKaldnes K3 Media, (ft^3)	13,309	High density polyethylene carrier elements.
Air scour system	Yes	An air sparging system in 304L SS will be provided to scour the screens.
Regenerative Blowers	2	Regenerative blowers for screen air sparging. Blowers will be rated for 517 SCFM and 16.8 NPHP.

Notes Regarding System Design and Installation

- For any MBBR or IFAS system, regardless of manufacturer, the quality and finish of reactor surfaces is important for the long-term longevity of the system. AnoxKaldnes has years of experience in the design and manufacture of MBBR and IFAS systems, with the quality and texture of the finished reactor walls is important. It is particularly important to prevent chipping, holidays, or rough areas that would leave open any annular spaces around media retention screens.

Scope of Supply BY INSTALLER/PURCHASER

The contractor's scope of supply for the AnoxKaldnes IFAS system should include, but is not limited to, the following items:

- All civil/site and electrical work.
- All provisions for interconnecting piping.
- Unloading, storage and installation of equipment.
- Chemical addition systems.

Design Options

In addition to the proposed system as detailed herein, Kruger is able to further incorporate our process and controls expertise into wastewater treatment plants, allowing municipalities to meet stringent effluent requirements and future plant upgrades. Kruger is also able to offer our instrumentation and controls expertise to build upon the proposed system by providing a **customized plant-wide SCADA system** or designing a **Motor Control Center (MCC)**, providing clients a single source responsibility for plant controls. Please contact Kruger if the options above are of interest or to be included in the current proposed system or future upgrades. ***Please note that the design options listed above are not included in the pricing noted herein.*

Schedule

- Shop drawings will be submitted within 6-8 weeks of receipt of an executed contract by all parties.

- All equipment will be delivered within 18-20 weeks after receipt of written approval of the shop drawings.
- Installation manuals will be furnished upon delivery of equipment.
- Operation and Maintenance Manuals will be submitted within 90 days after receipt of approved shop drawings.

Pricing

The price for the AnoxKaldnes IFAS system, as defined herein, including process and design engineering, field services, and equipment supply is:

IFAS System upgrade: $435,000

Pricing is FOB shipping point, with freight allowed to the job site. This pricing does not include any sales or use taxes. In addition, pricing is valid for ninety (90) days from the date of issue and is subject to negotiation of a mutually acceptable contract.

Please note that the above pricing is expressly contingent upon the items in this proposal and are subject to I. Kruger Inc. Standard Terms of Sale detailed herein.

Kruger Standard Terms of Payment

The terms of payment are as follows:

- 10% on receipt of fully executed contract
- 15% on submittal of shop drawings
- 75% on the delivery of equipment to the site

Payment shall not be contingent upon receipt of funds by the Contractor from the Owner. There shall be no retention in payments due to I. Kruger Inc. All other terms per our Standard Terms of Sale are attached.

All payment terms are net 30 days from the date of invoice. Final payment not to exceed 120 days from delivery of equipment.

Erie North Plant

	Anaerobic #1	Anaerobic #2	Anoxic #1	Anoxic #2	IFAS #1	IFAS #2
Short-Term Improvements						
NH3-N Conc. (mg/L)	0.8	18.0	8.6	8.8	0.7	0.4
NO3-N Conc. (mg/L)	0.1	0.0	0.6	0.0	2.9	5.6
Ortho-P Conc. (mg/L)	0.7	11.8	5.0	6.3	2.2	0.2
DO Conc. (mg/L)	-	-	-	-	4.0	3.0
Total Process Air Requirement (scfm)	-	-	-	-	3,759	629
Long-Term Improvements						
NH3-N Conc. (mg/L)	0.9	18.1	8.7	9.0	0.8	0.5
NO3-N Conc. (mg/L)	0.0	0.0	0.7	0.0	5.3	5.6
Ortho-P Conc. (mg/L)	1.1	13.6	5.6	7.0	2.5	0.2
DO Conc. (mg/L)	-	-	-	-	4.0	3.0
Total Process Air Requirement (scfm)	-	-	-	-	4,627	876

Erie South Plant

	Anoxic	IFAS	Aerobic
NH3-N Conc. (mg/L)	7.4	1.0	0.6
NO3-N Conc. (mg/L)	0.0	6.4	6.8
DO Conc. (mg/L)	-	4.0	2.0
Total Process Air Requirement (scfm)	-	3,331	645

Frachetti Engineering

Erie South, CO

3/18/2014

AnoxKaldnes™ IFAS

Kruger Project No.: 5700106402

Submitted to:

Nick Worley, P.E.
Franchetti Engineering
5325 S Valentia Way
Greenwood Village, CO 80111

Submitted by:

Brad Mrdjenovich
AnoxKaldnes Applications Engineer
I Kruger Inc.
4001 Weston Parkway
Cary, NC 27513

This document is confidential and contains proprietary information.
It is not to be disclosed to a third party without the written consent of Veolia Water Solutions & Technologies

Introduction

I Kruger Inc is pleased to present this budgetary proposal for our AnoxKaldnes IFAS System.

The proposed facilities will be installed within the existing aeration tank volume and will incorporate one (1) pre-anoxic zone, one (1) aerobic IFAS zone, and one (1) aerobic nitrification zone to meet a total inorganic nitrogen effluent requirement of 10 mg/L.

The existing blower capacity of approximately 7,500 scfm (three (3) blowers rated for 1,500 scfm each and three (3) blowers rated for 1,000 scfm each) should provide enough air for the needs of the process provided that the rated discharge pressure of the equipment is sufficient.

We appreciate the opportunity to provide this proposal to you. If you have any questions or need further information, please contact our local Representative, Brian Dieke of the Water Technology Group, or our AnoxKaldnes Product Manager, Chris Thomson, at (919)-653-4562 (chris.thomson@veolia.com).

cc: CT, DOF, project file (Kruger)
Brian Dieke (Water Technology Group)

Revision	Date	Process Eng.	Comments
0	03/11/2014	DOF, JH	Initial, budgetary proposal.

AnoxKaldnes IFAS System Configuration

Kruger proposes to retro-fit the existing aeration tanks for biological treatment of BOD, and NH_3-N, and NO_3-N by creating two trains each consisting of one (1) pre-anoxic zone, one (1) aerobic IFAS zone, and one (1) aerobic nitrification zone.

Design Summary

The proposed design is based on the following influent wastewater characteristics and incorporating peak flow conditions for screen design purposes only. The design assumes that the raw influent wastewater is biodegradable, no toxic compounds are present, sufficient alkalinity is available to avoid pH depressions, that the COD/BOD ratio is between 1.7 and 2.3, and that none of the equipment provided would be used in a classified area (e.g. Class 1, Division 1 or Class 1, Division 2).

Facilities with primary clarification will require screening with a maximum of 6 mm (1/4 inch) openings for removal of particulate matter (rags, debris, etc.) prior to entering the AnoxKaldnes IFAS treatment reactors. Facilities that lack primary clarification will require screening with a maximum of 3 mm (1/8 inch) openings.

Table 1: Influent Design Basis

Parameter	Units	Value
Flow, Max. Month	MGD	1.6
Flow, Peak Hour	MGD	3.9
BOD, Max. Month	mg/L	325
TSS, Max. Month	mg/L	310
TKN, Max. Month	mg/L	60
NH_3-N, Max. Month	mg/L	35
Elevation	ft	4,940*
Min./Max. Temperature	°C	15/22*

*Assumed values.

Table 2: Effluent Objectives

Parameter	Units	Value
TIN	mg/L	10

Table 3: Process Design Summary

Parameter	Units	Values
Number of Process Trains	-	2
Number of Pre-Anoxic Zones per Train	-	1
Number of Aerobic IFAS Zones per Train	-	1
Number of Aerobic Nitrification Zones per Train	-	1
Pre-Anoxic Zone		
Dimensions (Each)	ft	26 L × 32.1 W × 16.5 SWD
Volume (Each)	ft^3	13,771
Total Volume (All Reactors, All Trains)	ft^3	27,542
Number of Mixers Per Reactor	-	1
Total Number of Mixers (All Reactors, All Trains)	-	2
IFAS Zone		
Dimensions (Each)	ft	27.5 L × 32.1 W × 16.5 SWD
Volume (Each)	ft^3	14,565
Total Volume (All Reactors, All Trains)	ft^3	29,131
Media Type:	-	K5
Fill of Biofilm Carriers	%	45
Media Volume (All Reactors, All Trains)	ft^3	13,135
Aeration System Type	-	Medium Bubble
Total Process Air Requirement (All Reactors, All Trains)	SCFM	3,331
Total Mixing Air Requirement (All Reactors, All Trains)	SCFM	1,236
Discharge Pressure (From Top of Drop Pipe)	psi	7.5
Aerobic Nitrification Zone		
Dimensions (Each)	ft	27.5 L × 32.1 W × 16.5 SWD
Volume (Each)	ft^3	14,565
Total Volume (All Reactors, All Trains)	ft^3	29,131
Aeration System Type	-	Medium Bubble
Total Process Air Requirement (All Reactors, All Trains)	SCFM	645
Total Mixing Air Requirement (All Reactors, All Trains)	SCFM	264

Parameter	Units	Values
Discharge Pressure (From Top of Drop Pipe)	psi	7.5
MLSS, Max. Month	mg/L	3,500
IMLR, Max. Month	%	400
RAS, Max. Month	%	50-100
Sludge Production, Max. Month	lb/day	3,728

Scope of Supply

Kruger is pleased to present our scope of supply which includes process engineering design, equipment procurement, and field services required for the proposed treatment system, as related to the equipment specified. The work will be performed to Kruger's high standards under the direction of a Project Manager. All matters related to the design, installation, or performance of the system shall be communicated through the Kruger representative giving the Engineer and Owner ready access to Kruger's extensive capabilities.

Process and Design Engineering

Kruger will provide process engineering and design support for the system as follows:

- Process Engineering consisting of aeration system sizing and configuration, sieve and outlet design.
- Review and approval of P&I Diagram for the AnoxKaldnes IFAS portion of the process. Preliminary General Arrangement Drawings and review and approval of final General Arrangement Drawings for the process. Review of reactor drawings with respect to penetrations and dimensions, excluding structural design.
- Equipment installation instructions for all equipment supplied by Kruger.

Field Services

Kruger will furnish a Service Engineer to perform the following tasks:

- Inspect installation of key pieces of equipment during construction.
- Inspect the completed system prior to startup.
- Assist the Contractor with initial startup of the system.
- Train the Owner’s staff in the proper operation and maintenance of the AnoxKaldnes IFAS system.
- Test and start any Kruger-supplied control equipment, including PLC programming and SCADA systems.

AnoxKaldnes IFAS System Equipment – Limited to In-Basin Equipment Only

Process and Mechanical Equipment Items	Qty	Description
AnoxKaldnes K3 Media, (ft^3)	13,135	High density polyethylene carrier elements.
Cylindrical Screen Assemblies	28	Fourteen (14) per IFAS reactor. 304L SS. 23" ø perforated plate pipes terminated in ANSI flanges for mounting directly to the tank wall.
Medium Bubble Aeration system	4	304L SS including header, lateral piping, and hardware (excluding anchor bolts).
Air scour system	Yes	An air sparging system in 304L SS will be provided to scour the screens.
Regenerative Blowers	2	Regenerative blowers for screen air sparging. Blowers will be rated for 166 SCFM and 8.5 NPHP.
IMLR Wall Pumps	2	One (1) per train rated for 3.2 MGD at 3 feet TDH.
Modulating Airflow Control Valves	4	One (1) actuated BFV for each aerobic reactor.
Submersible Mixers	2	One (1) for each pre-anoxic reactor. Submersible Propeller Mixer, 304SS Rails, Hoist, and Receiving Bracket.

Instrumentation and Controls Equipment Items	Qty	Description
PLC Control Panel	1	NEMA 12 Freestanding or Wall Mount Control Panel (For Indoor Use). ControlLogix PLC; Panelview HMI;
High Level Float Switch	2	One (1) for each IFAS reactor.
Thermal Mass Flowmeter	4	One (1) for each aerobic reactor.
DO Probe (LDO)	4	One (1) for each Aerobic zone. Aerobic Zone DO Monitoring

Notes Regarding System Design and Installation

- For any MBBR or IFAS system, regardless of manufacturer, the quality and finish of reactor surfaces is important for the long-term longevity of the system. AnoxKaldnes has years of experience in the design and manufacture of MBBR and IFAS systems, with the quality and texture of the finished reactor walls is important. It is particularly important to prevent chipping, holidays, or rough areas that would leave open any annular spaces around media retention screens.

Scope of Supply BY INSTALLER/PURCHASER

The contractor's scope of supply for the AnoxKaldnes IFAS system should include, but is not limited to, the following items:

- All civil/site and electrical work.
- All provisions for interconnecting piping.
- Unloading, storage and installation of equipment.
- Chemical addition systems.

Design Options

In addition to the proposed system as detailed herein, Kruger is able to further incorporate our process and controls expertise into wastewater treatment plants, allowing municipalities to meet stringent effluent requirements and future plant upgrades. Kruger is also able to offer our instrumentation and controls expertise to build upon the proposed system by providing a **customized plant-wide SCADA system** or designing a **Motor Control Center (MCC)**, providing clients a single source responsibility for plant controls. Please contact Kruger if the options above are of interest or to be included in the current proposed system or future upgrades. ***Please note that the design options listed above are not included in the pricing noted herein.*

Schedule

- Shop drawings will be submitted within 6-8 weeks of receipt of an executed contract by all parties.
- All equipment will be delivered within 18-20 weeks after receipt of written approval of the shop drawings.
- Installation manuals will be furnished upon delivery of equipment.
- Operation and Maintenance Manuals will be submitted within 90 days after receipt of approved shop drawings.

Pricing

The price for the AnoxKaldnes IFAS system, as defined herein, including process and design engineering, field services, and equipment supply is: **$1,058,000.**

Pricing is FOB shipping point, with freight allowed to the job site. This pricing does not include any sales or use taxes. In addition, pricing is valid for ninety (90) days from the date of issue and is subject to negotiation of a mutually acceptable contract.

Please note that the above pricing is expressly contingent upon the items in this proposal and are subject to I. Kruger Inc. Standard Terms of Sale detailed herein.

Nick,

Sorry for the delay in getting this information to you.

· Budget Cost for FKC RDT to thicken 150 gpm (610 lbs/hr) WAS = $69,000 for model RST-S630x3000L Rotary Screen and 285 gallon flocculation tank. This does not include controls, feed pump, or polymer system.

· Budget Cost for FKC RDT to thicken 200 gpm (780 lbs/hr) WAS = $87,360 for model RST-S775x3600L Rotary Screen and 450 gallon flocculation tank. This does not include controls, feed pump, or polymer system.

· Budget Cost for second FKC screw press/polymer system/conveyor = $459,500 to match existing FKC screw press/polymer system/conveyor. This does not include the Rotary Screen Thickener (RST), RST support structure, flocculation tank, sludge feed pump, or controls.

Please let me know if you need additional information.

Roger Olson
FKC Co., Ltd.
2708 W. 18th St.
Port Angeles, WA 98363
Office: (360) 452-9472
Fax: (360) 452-6880
rjolson@fkcscrewpress.com

From: Nick Worley [mailto:nick@frachetti.com]
Sent: Tuesday, March 11, 2014 11:20 PM
To: 'Brian Dieke'
Subject: Town of Erie

Brian, I have been working with Kruger directly on updated calculations for the Town of Erie at an updated influent loading concentration. I believe they will set up a meeting later this week to review the results of their calculations so stay tuned.

For the alternatives evaluation part of the memo I am working on, I would like to get some budget costs for the following:

- Cost for FKC RDT to thicken 150 gpm (610 lbs/hr) WAS
- Cost for FKC RDT to thicken 200 gpm (780 lbs/hr) WAS
- Cost for second FKC screw press/polymer system/conveyor

We are in very preliminary stage of alternatives evaluation so I only need budget pricing and plan/section of the above equipment.

Please let me know if you have any questions.

Frachetti Engineering
Focused. Engaged. Innovative.
Nick Worley, P.E.
Project Engineer
5325 S Valentia Way
Greenwood Village, CO 80111
Phone: 303.300.3464
Direct: 303.928.1389
www.frachetti.com
nick@frachetti.com

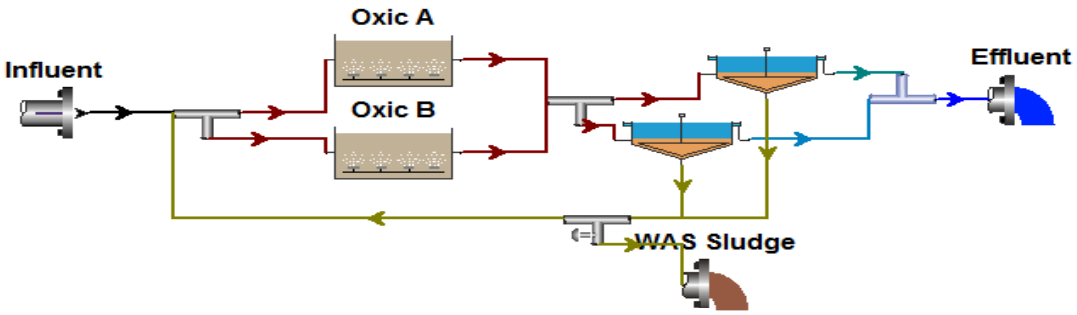

Inf Flow 0.9 MGD
Temp 12°C
MLSS ~ 3600 mg/L
SRT ~ 10 d
RAS ~ 0.75Q

Influent		
Parameters	Conc. (mg/L)	Mass rate (lb/d)
Volatile suspended solids	260	1955
Total suspended solids	346	2600
Particulate COD	415	3115
Filtered COD	243	1828
Total COD	658	4942
Soluble PO4-P	4	30
Total P	8	60
Filtered TKN	48	364
Particulate TKN	12	87
Total Kjeldahl Nitrogen	60	451
Filtered Carbonaceous BOD	149	1120
Total Carbonaceous BOD	323	2430
Nitrite + Nitrate	0	0
Total N	60	451
Total inorganic N	40	297
Alkalinity	6	20
pH	7	
Volatile fatty acids	16	119
ISS precipitate	0	0
ISS cellular	1	6
ISS Total	86	645
Ammonia N	**35**	**262**

Effluent		
Parameters	Conc. (mg/L)	Mass rate (lb/d)
Volatile suspended solids	9	64
Total suspended solids	13	98
Particulate COD	13	95
Filtered COD	35	256
Total COD	48	351
Soluble PO4-P	3	21
Total P	3	23
Filtered TKN	4	27
Particulate TKN	1	6
Total Kjeldahl Nitrogen	5	33
Filtered Carbonaceous BOD	2	12
Total Carbonaceous BOD	5	39
Nitrite + Nitrate	37	272
Total N	42	305
Total inorganic N	39	281
Alkalinity	1	2
pH	6	
Volatile fatty acids	0	0
ISS precipitate	0	0
ISS cellular	1	4
ISS Total	5	33
Ammonia N	**1.20**	**8.70**
Nitrate N	37	269

THIS PAGE INTENTIONALLY LEFT BLANK

Information Provided by Town of Erie

- Costs for operating the south plant including personnel, electric, lab, etc. (does the Town have annual or monthly costs from when the south plant was operational?). If south plant was brought on line for periods of year, would the Town hire more plant operators or hire contract operator for south plant? Approximate costs for the complete operation of the SWRF was $640K for 2010. I have not determined how I would staff the SWRF if it was brought back on line. Short term would probably be a contract operator. Long term, I would probably hire one additional operator. As flows increased, I would probably hire an additional mechanic next than another operator.
- Cost for SWRF - Operations staff (total annual cost to pay staff to operate facility) (take a guess on what percentage is contributed to solids handling) 2010 operations staff was $160K. Bringing on one additional operator for the SWRF would probably be around $45K. Solids operations there was a small percentage of the total. My guess is around 5%.
- Cost for SWRF - Electricity at 0.9 MGD flow rate (annual electric bill from 2009) (take a guess on what percentage is contributed to solids handling)Actual electrical for 2010 was $162K. The SWRF uses 250 HP for aeration and 150 HP for digestion. There was around an additional 60 HP for pumps and such. That would make digestion about 33% of the total.
- Cost for SWRF - All other expenses $318K
- Cost for SWRF - hauling liquid sludge (verify 3.8cents per gallon for liquid haul) Hauling costs for 2010 were $132K. I had a good deal their and hauling costs were about 2.9 cents/gallon. I would anticipate the 3.8 cents there going forward.
- Cost for NWRF - Operations staff (total annual cost to pay staff to operate facility) (take a guess on what percentage is contributed to solids handling with screw press operational)2012 actual was $200K. I added Daves position since that date. Current is $260K. This includes my position which should actually be split out half to water. We do not do that though. My estimate of percentage for solids handling is around 15%.
- Cost for NWRF - Operations staff to work with solids to add lime and haul liquid ($/day) Using the above figures, I get $106/day.
- Cost for NWRF - Electricity at 0.9 MGD flow rate (annual electric bill from 2009) (take a guess on what percentage is contributed to solids handling)Actual for 2012 was $230K. I would estimate 33% is solids handling.
- Cost for NWRF - Chemical costs (Lime dose (lbs/DT WAS) to get to 12pH and polymer dose (lbs/DT including mass of lime) with alum sludge from WTP 2012 actual was $190K. That was for 790 dry metric tons. My estimate is that around 40 DMT were Alum sludge. I estimate that around $10K of that was for alum sludge
- Cost for NWRF - Chemical costs (Lime dose (lbs/DT WAS) to get to 12 pH and polymer dose (lbs/DT including mass of lime) without alum sludge from WTP (take a guess)See above
- Cost for NWRF - boiler costs for class A product ($/DT WAS) Gas costs for 2012 are $30K for all uses. I estimate that about $25K is for the Class A process.
- Cost for NWRF - All other expenses Total costs for operation and maintenance for 2012 was $995K. All capital improvements were from a separate fund.
- Cost for NWRF - hauling liquid sludge (verify 3.8cents per gallon for liquid haul) 3.8 cents is accurate
- Cost for NWRF - hauling solid sludge (do you ever pay to have solid sludge hauled off or just store onsite?) Minimal at this point. We have estimated that yearly costs to haul dried Biosolids would be around $95K. That would be hauling all of it for disposal as class B

THIS PAGE INTENTIONALLY LEFT BLANK

Appendix P

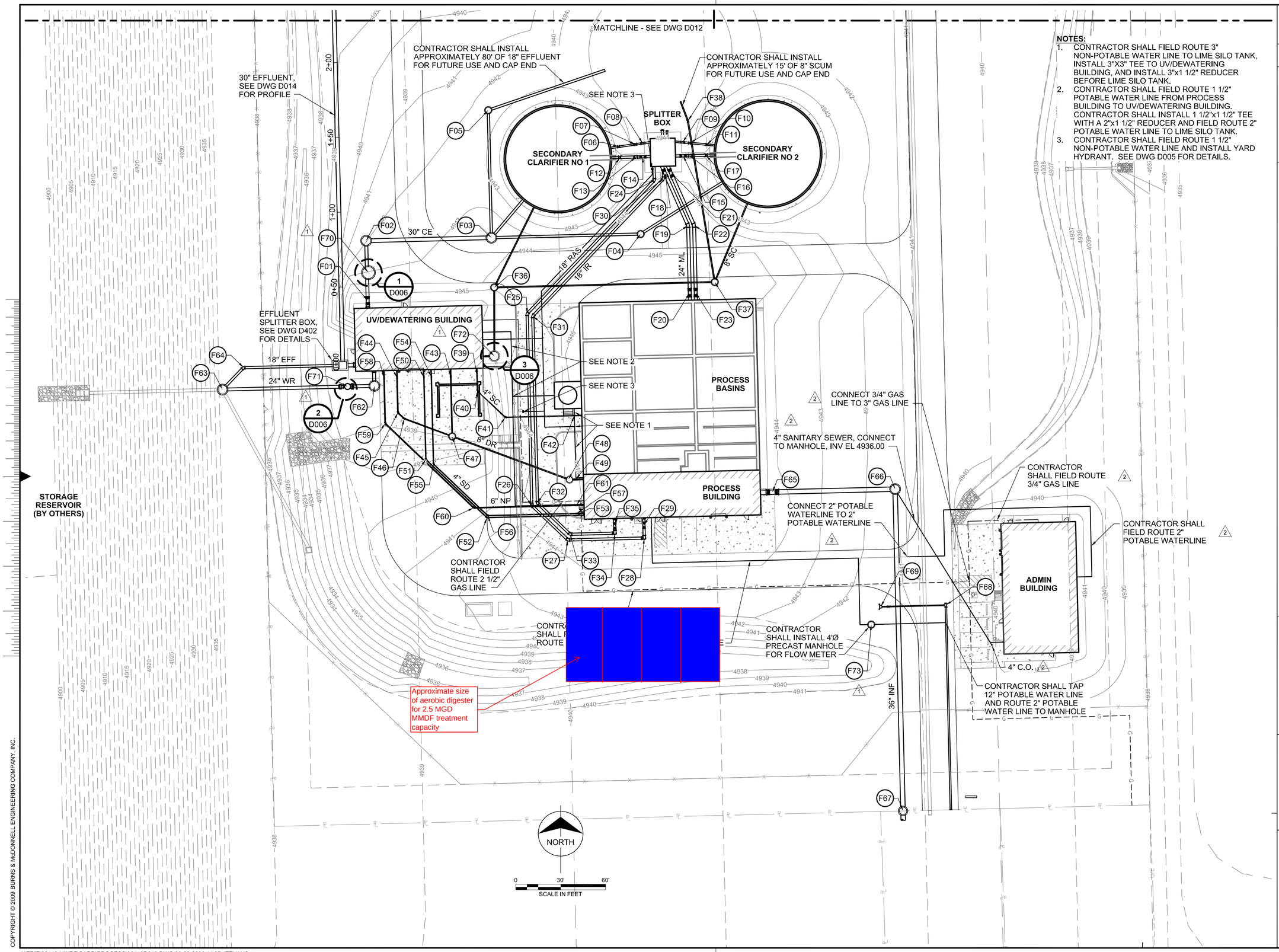

NOTES:

1. CONTRACTOR SHALL FIELD ROUTE 3" NON-POTABLE WATER LINE TO LIME SILO TANK, INSTALL 3"X3" TEE TO UV/DEWATERING BUILDING, AND INSTALL 3"x1 1/2" REDUCER BEFORE LIME SILO TANK.
2. CONTRACTOR SHALL FIELD ROUTE 1 1/2" POTABLE WATER LINE FROM PROCESS BUILDING TO UV/DEWATERING BUILDING. CONTRACTOR SHALL INSTALL 1 1/2"x1 1/2" TEE WITH A 2"x1 1/2" REDUCER AND FIELD ROUTE 2" POTABLE WATER LINE TO LIME SILO TANK.
3. CONTRACTOR SHALL FIELD ROUTE 1 1/2" NON-POTABLE WATER LINE AND INSTALL YARD HYDRANT. SEE DWG D005 FOR DETAILS.

no.	date	by	ckd	description
0	9/25/09	ALW	SAY	ISSUED FOR CONSTRUCTION
1	10/30/09	RWF		REVISED PER RFI #11
	10/30/09	ALW	SAY	ISSUED WITH RFI #11
2	12/18/09	JTE		ADDED PER ADMIN BUILDING
	12/18/09	ALW	SAY	ISSUED FOR BLDG DEPT REVIEW
	2/18/10	ALW	SAY	RE-ISSUED FOR CONSTRUCTION
	1/9/12	RWF		**CONFORMING TO CONSTRUCTION RECORDS**

Burns & McDonnell SINCE 1898

date JANUARY, 2012	detailed R. FULK
designed A. WADDOUPS	checked S. YONKER

TOWN OF ERIE 1874

TOWN OF ERIE
NORTH WATER RECLAMATION FACILITY

YARD PIPING F

project 39119 | contract

drawing **D013** – rev. **2**

sheet 134 of 196 sheets

file 39119D013.dwg

COPYRIGHT © 2009 BURNS & McDONNELL ENGINEERING COMPANY, INC.

J:\ERIE\39119-NWRF\CADD\PROCESS\39119D013.DWG 09-23-2009 14:37 JTEVANS

THIS PAGE INTENTIONALLY LEFT BLANK

OBJECTIVE: Calculate the Capital and O&M costs associated with alternative operation

GIVEN: NWRF Treats all flow and solids - WTP sends alum sludge to WRF
NWRF produces class A cake with FKC screw press for 100% of solids

O&M Costs for NWRF 2012 per Jon Mays		Liquid	Solids	
Total Annual Cost	$ 995,000	$ -	$ -	0
Operations Staff	$ 260,000	$ 221,000	$ 39,000	15% devoted to solids
Electricity	$ 230,000	$ 153,410	$ 76,590	33% devoted to solids
Chemical Costs	$ 190,000	$ -	$ 190,000	100% devoted to solids
Gas Costs	$ 30,000	$ 5,000	$ 25,000	0
Other	$ 285,000	$ 285,000	$ -	100% devoted to liquid

Average influent flow for 2012 to NWRF was 1.08MGD which is close to 0.9 MGD used in this alternative. Use 2012 O&M costs for this alternative and assume the FKC press can continue to produce a Class A product.

CALCULATIONS:

Annual O&M Costs

(2) NWRF Operations Costs

Electric Costs	$ 76,590	per year
Operations Staff	$ 39,000	per year
Chemical Usage	$ 190,000	per year
Gas Usage	$ 25,000	per year

Assume Cake for 6 months and Liquid for 6 months until 2019 when WTP stops sending Alum Sludge (30% cake)

Annual Electric Usage Excalation Factor	2.00%
Annual Staff Usage Excalation Factor	0.50%

Total Influent Flow	2.5				
SWRF	0	Lime Usage Winter	553 lbs/DT	Polymer Usage Winter	178 lbs/DT
NWRF	2.5	Lime Usage Summer	1318 lbs/DT	Polymer Usage Summer	0 lbs/DT
Cake %	30%	Lime no Alum	300 lbs/DT	Polymer no Alum	40 lbs/DT

							2.50% Concentratio		PPD at each plant								Cake haul				Lime Cost			Polymer Cost		
							Sludge Produced (ppd)		NWRF (ppd)		ppd	Liquid to Haul (gpd)		NWRF (gpd)	100%		NWRF				NWRF			NWRF		
Year	Electric and Gas Cost	Staff	Solids Disp	Chemical	O&M Cost	P/F	Alum	No alum	Alum	No alum	Lime added	Alum	No Alum	Alum	No Alum	Summer	Winter	$/WT	$/gal	Summer	Winter	$/Ton	Summer	Winter	$/lb
2015	$ 101,590	$ 39,000	$ 233,391	$ 213,676	$ 587,657	$ 587,657	5290	4232	5290	4232	1463	25357	20286	25357	20286	$ 1,065	$ 214	$ 19	$ 0.042	$ 386.97	$ 162.36	222	$ -	$ 621	$ 1.32
2016	$ 107,076	$ 40,326	$ 257,785	$ 234,764	$ 639,950	$ 621,915	5608	4486	5608	4486	1551	26879	21503	26879	21503	$ 1,176	$ 236	$ 20	$ 0.044	$ 425.16	$ 178.39	230	$ -	$ 683	$ 1.37
2017	$ 112,858	$ 41,697	$ 284,728	$ 257,932	$ 697,216	$ 658,471	5944	4755	5944	4755	1644	28492	22793	28492	22793	$ 1,299	$ 261	$ 21	$ 0.046	$ 467.12	$ 195.99	239	$ -	$ 750	$ 1.42
2018	$ 118,952	$ 43,115	$ 308,555	$ 278,041	$ 748,662	$ 687,132	6182	4945	6182	4945	1709	29631	23705	29631	23705	$ 1,408	$ 283	$ 21	$ 0.048	$ 503.54	$ 211.27	247	$ -	$ 809	$ 1.47

Total NPW O&M Costs **$2,555,174** 2015 - 2029 only

CONCLUSION:

Present Worth Analysis

Years Considered in NPV	8	yrs
Interest Rate used for NPV	2.90%	

Cost Type	Year	Total Cost	Discount Factor	Present Value
Capital Cost	0	$ -	1.00	$ -
Total O&M Cost				$ 2,555,174
Net Present Worth				**$ 2,556,000**

OBJECTIVE: Calculate the Capital and O&M costs associated with alternative operation

GIVEN: NWRF Treats all flow and solids - WTP does not send alum sludge to WRF
NWRF produces class A cake with FKC screw press for 100% of solids

O&M Costs for NWRF 2012 per Jon Mays		Liquid	Solids	
Total Annual Cost	$ 995,000	$ -	$ -	0
Operations Staff	$ 260,000	$ 221,000	$ 39,000	15% devoted to solids
Electricity	$ 230,000	$ 153,410	$ 76,590	33% devoted to solids
Chemical Costs	$ 190,000	$ -	$ 190,000	100% devoted to solids
Gas Costs	$ 30,000	$ 5,000	$ 25,000	0
Other	$ 285,000	$ 285,000	$ -	100% devoted to liquid

Average influent flow for 2012 to NWRF was 1.08MGD which is close to 0.9 MGD used in this alternative. Use 2012 O&M costs for this alternative and assume the FKC press can continue to produce a Class A product.

CALCULATIONS:

Annual O&M Costs

(2) NWRF Operations Costs

Electric Costs	$ 76,590	per year
Operations Staff	$ 39,000	per year
Chemical Usage	$ 190,000	per year
Gas Usage	$ 25,000	per year

Assume Cake for 6 months and Liquid for 6 months until 2019 when WTP stops sending Alum Sludge (30% cake)

Annual Electric Usage Excalation Factor	2.00%
Annual Staff Usage Excalation Factor	0.50%

Total Influent Flow	2.5	
SWRF	0	
NWRF	2.5	
Cake %	30%	

per FKC recommendations

Lime Usage Winter	300	lbs/DT
Lime Usage Summer	300	lbs/DT
Lime no Alum	300	lbs/DT

Polymer Usage Winter	40	lbs/DT
Polymer Usage Summer	40	lbs/DT
Polymer no Alum	40	lbs/DT

Year	Electric and Gas Cost	Staff	Solids Disp	Chemical	O&M Cost	P/F
2015	$ 101,590	$ 39,000	$ 70,318	$ 83,126	$ 294,034	$ 294,034
2016	$ 107,076	$ 40,326	$ 77,667	$ 91,330	$ 316,399	$ 307,482
2017	$ 112,858	$ 41,697	$ 85,785	$ 100,343	$ 340,683	$ 321,751
2018	$ 118,952	$ 43,115	$ 92,963	$ 108,166	$ 363,196	$ 333,346

2.50% Concentratio		PPD at each plant																					
Sludge Produced (ppd)		NWRF (ppd)		ppd	Liquid to Haul (gpd)		NWRF (gpd)		100%	Cake haul NWRF				Lime Cost NWRF			Polymer Cost NWRF		
Alum	No alum	Alum	No alum	Lime added	Alum	No Alum	Alum	No Alum		Summer	Winter	$/WT	$/gal	Summer	Winter	$/Ton	Summer	Winter	$/lb
5290	4232	5290	4232	794	25357	20286	25357	20286		$ 193	$ 193	$ 19	$ 0.042	$ 88	$ 88	222	$ 140	$ 140	$ 1.32
5608	4486	5608	4486	841	26879	21503	26879	21503		$ 213	$ 213	$ 20	$ 0.044	$ 97	$ 97	230	$ 153	$ 153	$ 1.37
5944	4755	5944	4755	892	28492	22793	28492	22793		$ 235	$ 235	$ 21	$ 0.046	$ 106	$ 106	239	$ 169	$ 169	$ 1.42
6182	4945	6182	4945	927	29631	23705	29631	23705		$ 255	$ 255	$ 21	$ 0.048	$ 115	$ 115	247	$ 182	$ 182	$ 1.47

Total NPW O&M Costs **$1,256,613** 2015 - 2029 only

CONCLUSION:

Present Worth Analysis

Net Present Worth with Alum Sludge	$	2,555,174
Net Present Worth without Alum Sludge	$	1,256,613
Total	$	1,298,561

Hauling Costs

Year	With Alum	Without Alum	Savings
2015	233,391	70318	163,073
2016	257,785	77667	180,118
2017	284,728	85785	198,943
2018	308,555	92963	215,591

Chemical Costs

Year	With Alum	Without Alum	Savings
2015	213,676	83126	130,550
2016	234,764	91330	143,434
2017	257,932	100343	157,589
2018	278,041	108166	169,875